Valve terminal MPA-C

Key features

Innovative

- Optimum design of the housing surface ensures that cleaning agents can run off, thus significantly reducing time and effort spent on cleaning
- Flow rate up to 780 l/min
- Sub-D multi-pin plug connection, front or rear
- I-Port interface/IO-Link, front or rear

Versatile

- Valves in individual grid
- System can be extended as required with individual sub-bases and modular tie rods
- Up to 32 solenoid coils
- Easy conversion and extension at a later date
- Air supply can be extended using additional pressure zones with power supply modules or sub-bases with an additional supply
- Wide range of pressures
- –0.09 ... +0.8 MPa
- Wide range of valve functions

Reliable

- Use of materials that are resistant to corrosion and media
- Fast troubleshooting with LEDs on the valves
- Easy to service with replaceable valves
- Manual override, optionally non-detenting
- Efficient sealing thanks to 5 tie rods and redundant seals
- NSF-H1 lubrication, FDA-compliant materials

Easy to mount

- Supplied as ready-to-install, tested unit
- Individually configurable pneumatic connections (straight or angled fittings, or with screw-in thread)
- Reduced selection, ordering, installation and commissioning costs
- Excellent corrosion resistance and IP69K degree of protection allow mounting under harsh ambient conditions outside a control cabinet

Key features

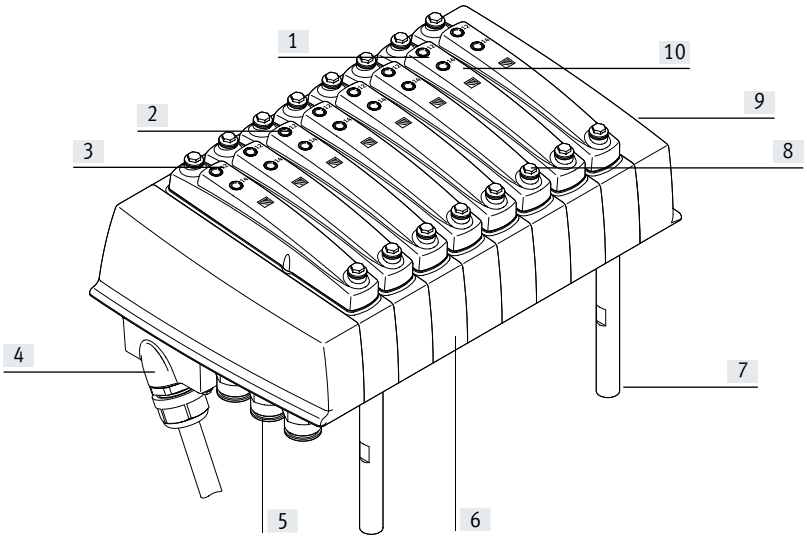

[1] Width 14 mm
[2] Reduced downtime: LED signal status indicator
[3] Modular:
Creation of pressure zones, additional exhaust and supply possible using power supply modules or sub-bases with an additional supply
[4] Simple electrical connection
– Multi-pin connection
– I-Port interface/IO-Link
[5] Practical:
pre-installed individually specified fittings
[6] Variable:
– 32 valve positions
– 32 solenoid coils
[7] Quick mounting:
using screws or spacer bolts
[8] Durable:
– High degree of protection IP69K
– Resistant to chemicals and cleaning agents
– High corrosion resistance
[9] Adaptable:
Selector sleeve in the end plate for choosing the pilot air supply (internal or external)
[10] Safe operation:
Manual override, non-detenting or concealed

Equipment options

Valve functions

- 5/2-way valve, single solenoid
- 5/2-way valve, double solenoid
- 2x 3/2-way valve, normally open
- 2x 3/2-way valve, normally closed
- 2x 3/2-way valve, 1x normally open, 1x normally closed
- 5/3-way valve mid-position pressurised
- 5/3-way valve mid-position closed
- 5/3-way valve mid-position exhausted
- 2x2/2-way valve 1x normally closed 1x normally closed, reversible
- 2x 2/2-way valve normally closed
- 1x 3/2-way valve normally closed external compressed air supply
- 1x 3/2-way valve, normally open external compressed air supply

Distinctive features

- Maximum of 32 valve positions
- Maximum of 32 solenoid coils
- Parallel modular valve linking
- Integrated holding current reduction
- Any compressed air supply
- Creating pressure zones
- Modular, individually extendable tie rods
- Valve positions in individual grid
- Freely selectable fittings/tubing size at every port

Ordering data – Product options

Configurable product
This product and all its product options can be ordered using the configurator.

The configurator can be found at
→ **www.festo.com/catalogue/...**
Enter the part number or the type.

Part no.	Type
575465	MPAC-VI

Key features

Multi-pin plug connection

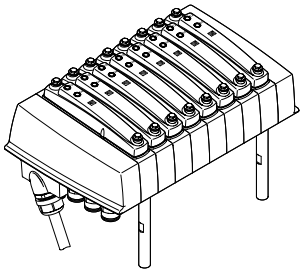

The signals are transmitted from the controller to the valve terminal via a pre-assembled or self-assembled multi-wire cable to the multi-pin plug connection, which substantially reduces installation time.

The valve terminal can be equipped with max. 32 solenoid coils. This corresponds to 2 to 32 valves.
The multi-pin cable should be no longer than 30 m.

Versions:
- Sub-D connection, 25-pin
- Sub-D connection, 44-pin

I-Port interface/IO-Link

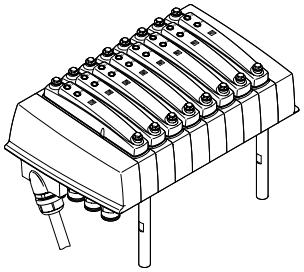

I-Port/IO-Link consists of a central master and the I-Port interface/IO-Link devices connected via special connecting cables. This enables a decentralised layout of the devices.
The connection type corresponds to a star topology.

In other words, only one module or one valve terminal can be connected to each I-Port.
The Festo I-Port interface is based on IO-Link and is therefore compatible with IO-Link in certain areas.

As well as communication, the I-Port interfaces also handle the power supply for the connected devices.
The maximum length of a string is 20 m.

Versions:
- Sub-D connection, 9-pin

Modular pneumatic components

The modular design of the MPA-C provides outstanding flexibility, even at the planning stage, and makes it exceptionally easy to service during operation.
The system consists of sub-bases, valves and blanking plates.

The sub-bases form the support system for the valves.
They contain the connection ducts for the compressed air supply to and exhausting from the valve terminal as well as the working ports for the pneumatic drives for every valve.

The sub-bases are connected by a tie rod system. This consists of a threaded rod, threaded sleeve and screw. The threaded rod/sleeve combination is selected according to the chosen number of individual sub-bases.
A valve terminal can be easily extended by adding individual sub-bases or supply modules. This is done by inserting suitable tie rod extenders between the threaded rod and the sleeve.

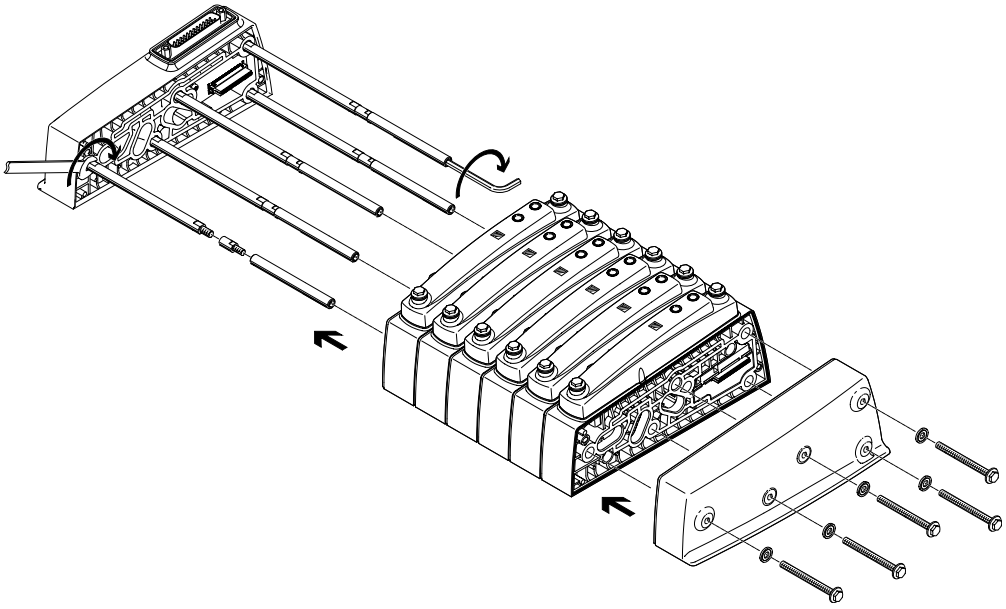

Peripherals overview

Valve terminal pneumatic components

MPA-C valve terminals with multi-pin plug connection or I-Port interface/IO-Link can be expanded by up to 32 solenoid coils/valve positions.

Every individual sub-base is available with a valve position for valves with one or two solenoid coils.

Double solenoid valve positions can be equipped with any valve or a blanking plate.

Single solenoid valve positions can only be fitted with single solenoid valves or a blanking plate.

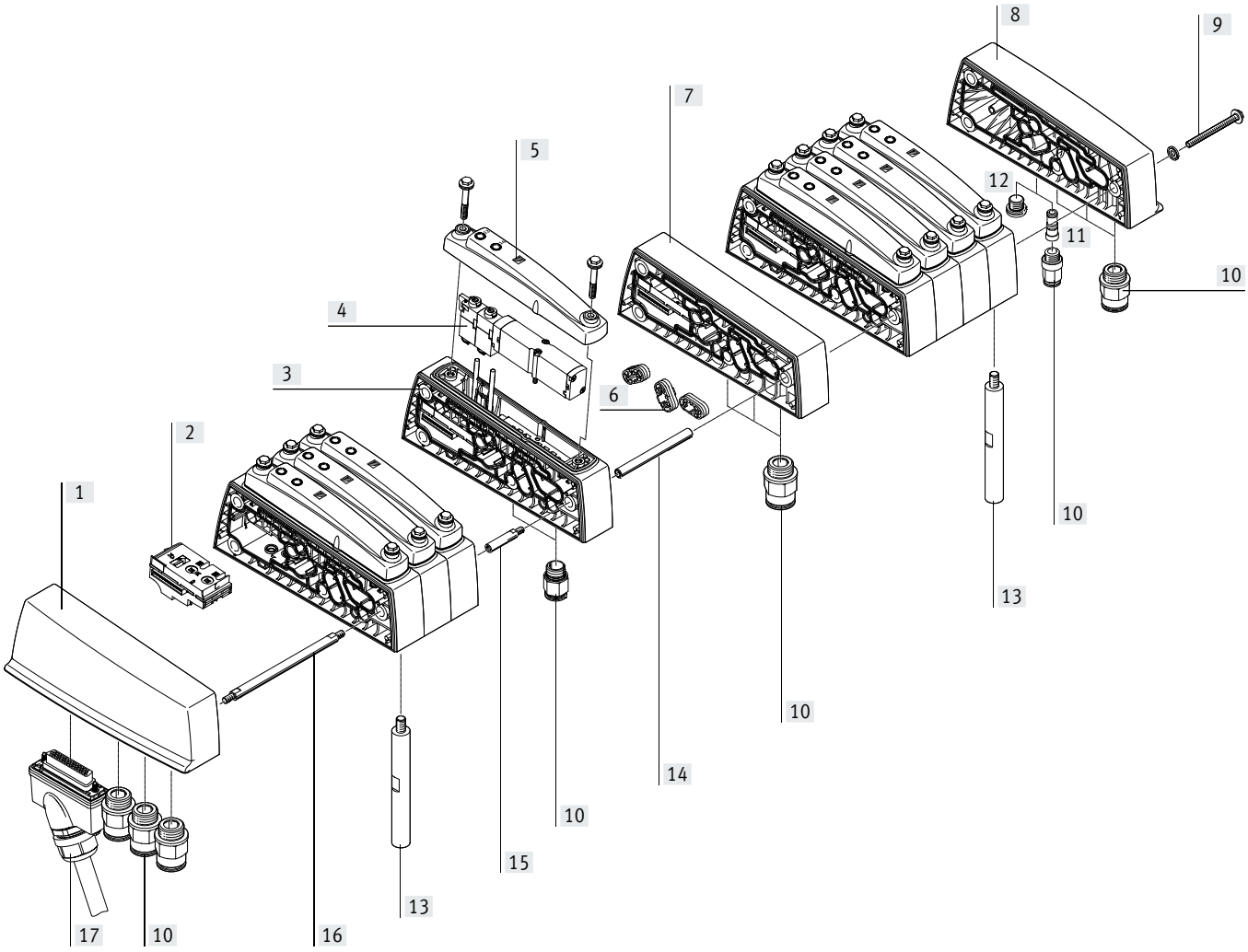

Designation		Description	→ Page/Internet
[1]	Left-hand end plate	With connections for compressed air supply/exhaust air	33
[2]	Electrical interlinking module	Electrical interlinking module for one sub-base, single/double solenoid	–
[3]	Sub-base, individual	Sub-base with one valve position for valve with one or two solenoid coils	32
[4]	Solenoid valve	With one or two solenoid coils	31
[5]	Cover	For one valve position	26
[6]	Separator	For pressure zone separation	33
[7]	Supply module	With connections for compressed air supply/exhaust air	33
[8]	Right-hand end plate	With connections for compressed air supply/exhaust air and external pilot air supply	33
[9]	Screw	Tie rod system, connects the sub-bases	32
[10]	Push-in fitting	For pneumatic connections	34
[11]	Plug	Enables conversion from internal to external pilot air supply	–
[12]	Blanking plug	For sealing ports that are not required	35
[13]	Mounting	Spacer bolts for mounting the valve terminal	33
[14]	Sleeve	Tie rod system, connects the sub-bases	32
[15]	Tie rod extender	For extending the valve terminal at a later date	32
[16]	Threaded rod for tie rod	Clamps the sub-bases between the end plates	32
[17]	Connecting cable	For I-Port interface or for multi-pin plug connection	33

Key features – Pneumatic components

Sub-base valve

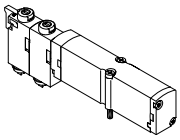

The MPA-C offers a comprehensive range of valve functions. All valves are fitted with a piston slide and patented sealing system that facilitates efficient sealing, a wide pressure range and a long service life. They have a pneumatic pilot control for optimising performance.

The air is supplied by a central pilot air supply.
Sub-base valves can be replaced quickly since the tubing connections remain on the sub-base.
This design is also particularly flat.
Irrespective of the valve function, there are sub-base valves with one solenoid coil (single solenoid) or with two solenoid coils (double solenoid or two single solenoid valves in one housing).

Design

Valve replacement

The valves are located under the cover. The cover and valve are each mounted on the sub-base with two screws, which means that the valves can be easily replaced. The sturdy mechanical structure of the cover and sub-bases ensures efficient, durable sealing.

Extension

Vacant positions (blanking plates) can be replaced by valves at a later date. The dimensions, mounting points and existing pneumatic installations remain unchanged during this process.

The valve code (e.g.: M, J, N, NS etc.) is located on the front of the valve under the manual override and can be read through an inspection window in the cover.

Note
A filter must be installed upstream of valves operated in vacuum mode. This prevents any foreign matter in the intake air getting into the valve (e.g. when operating a suction cup with connector).

5/2-way valve

Circuit symbol	Code	Description
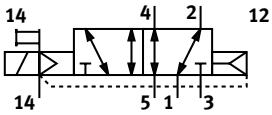	Position function 1-32: M	• Single solenoid • Pneumatic spring return • Reversible • Operating pressure –0.09 ... +1 MPa
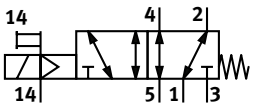	Position function 1-32: MS	• Single solenoid • mechanical spring return • Reversible • Operating pressure –0.09 ... +0.8 MPa
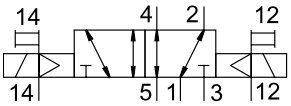	Position function 1-32: J	• Double solenoid • Reversible • Operating pressure –0.09 ... +1 MPa

Key features – Pneumatic components

2x 3/2-way valve Circuit symbol	Code	Description
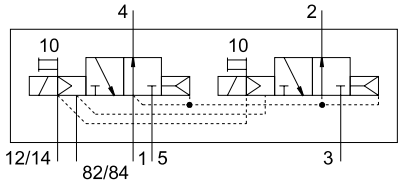	Position function 1-32: N	• Single solenoid • Normally open • Pneumatic spring return • Operating pressure 0.3 ... 1 MPa
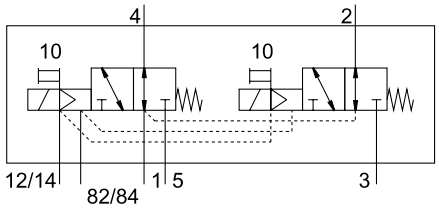	Position function 1-32: NS	• Single solenoid • Normally open • mechanical spring return • Reversible • Operating pressure –0.09 ... +0.8 MPa
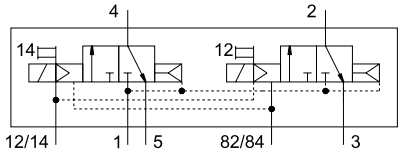	Position function 1-32: K	• Single solenoid • Normally closed • Pneumatic spring return • Operating pressure 0.3 ... 1 MPa
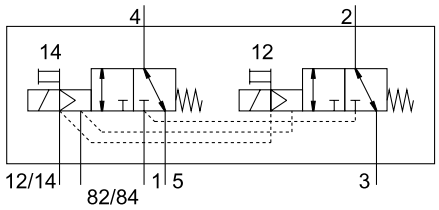	Position function 1-32: KS	• Single solenoid • Normally closed • mechanical spring return • Reversible • Operating pressure –0.09 ... +0.8 MPa
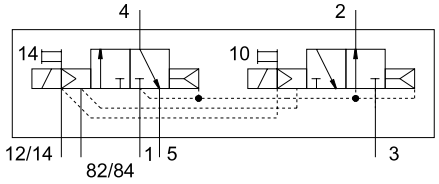	Position function 1-32: H	• Single solenoid • Normal position – 1x closed – 1x normally open • Pneumatic spring return • Operating pressure 0.3 ... 1 MPa
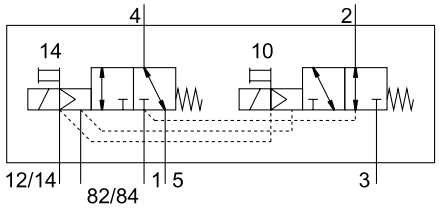	Position function 1-32: HS	• Single solenoid • Normal position – 1x closed – 1x normally open • mechanical spring return • Reversible • Operating pressure –0.09 ... +0.8 MPa

Key features – Pneumatic components

5/3-way valve

Circuit symbol	Code	Description
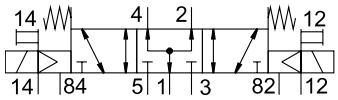	Position function 1-32: B	• Mid-position pressurised[1)] • mechanical spring return • Reversible • Operating pressure –0.09 ... +1 MPa
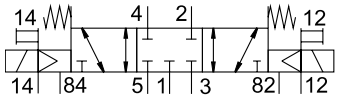	Position function 1-32: G	• Mid-position closed[1)] • mechanical spring return • Reversible • Operating pressure –0.09 ... +1 MPa
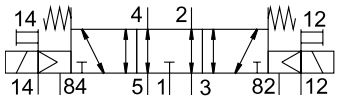	Position function 1-32: E	• Mid-position exhausted[1)] • mechanical spring return • Reversible • Operating pressure –0.09 ... +1 MPa

1) If neither solenoid coil is energised, the valve is moved to its mid-position by spring force.
If both coils are energised at the same time, the valve remains in the previously assumed switching position.

3/2-way valve

Circuit symbol	Code	Description
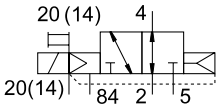	Position function 1-32: W	• Single solenoid • Normally open • External pressure supply • Pneumatic spring return • Reversible • Operating pressure –0.09 ... +1 MPa Pressure supplied at working port 2 (–0.09 ... +1 MPa) can be switched on with both internal and external pilot air supply.
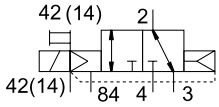	Position function 1-32: X	• Single solenoid • Normally closed • External pressure supply • Pneumatic spring return • Reversible • Operating pressure –0.09 ... +1 MPa Pressure supplied at working port 4 (–0.09 ... +1 MPa) can be switched on with both internal and external pilot air supply.

2x 2/2-way valve

Circuit symbol	Code	Description
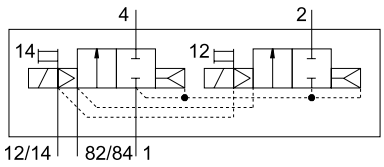	Position function 1-32: D	• Single solenoid • Normally closed • Pneumatic spring return • Operating pressure 0.3 ... 1 MPa
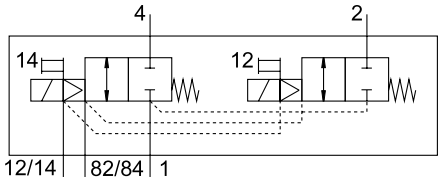	Position function 1-32: DS	• Single solenoid • Normally closed • mechanical spring return • Reversible • Operating pressure –0.09 ... +0.8 MPa
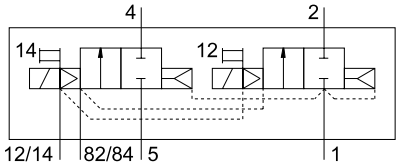	Position function 1-32: I	• Single solenoid • 1x normally closed • 1x normally closed, reversible only • Pneumatic spring return • Operating pressure 0.3 ... 1 MPa • Vacuum at port 3/5 only

Key features – Pneumatic components

Blanking plate

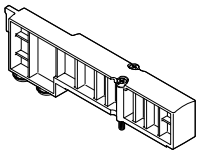

Vacant position (code L) without valve function, for reserving valve positions on a valve terminal.

The valve and vacant position are located under a blanking plate.

Using a combination of a cover and a sub-base without a valve is not permissible unless a blanking plate is also being used.

Exhaust air functions – Check valve

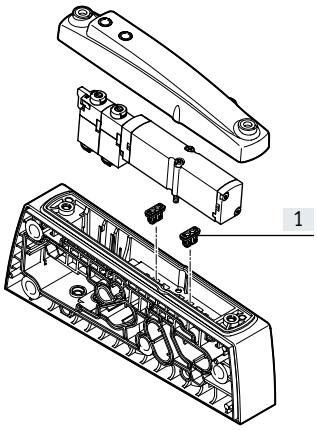

[1] Check valve

The check valves prevent the air from being pushed back (back pressure) from ducts 3 and 5 into the solenoid valve.
This prevents the back pressure from having a disruptive effect on other connected actuators.

The check valves are integrated into ducts 3 and 5 of the sub-bases.
The check valves should be installed according to the specifications using the enclosed assembly tool. Once installed, the check valves cannot be removed.

Please see the relevant assembly instructions:
➔ www.festo.com/catalogue/...
➔ Support/Downloads.

Compressed air supply and exhaust

The valve terminal MPA-C is supplied with compressed air via:
- Right-hand end plate
- Left-hand end plate
- Power supply modules
- Sub-bases with additional power supply

All pneumatic connections are located at the rear of the valve terminal.

Exhausting (ducts 3 and 5) can take place using a choice of:
- Right-hand end plate
- Left-hand end plate
- Power supply modules
- Sub-bases with additional power supply

Ducts 3 and 5 are routed completely separately in the terminal.

The pilot exhaust air (duct 82/84) is completely separate from ducts 3 and 5. Its port is located in the right-hand end plate, together with the ports for the pilot air supply (12/14) and the pressure compensation port (L).

All valves in the valve terminal are supplied by a common pilot air source, irrespective of the pressure zones.
The supply can either be:
- Internal (from duct 1 on the right-hand end plate) or
- External (from duct 12/14)

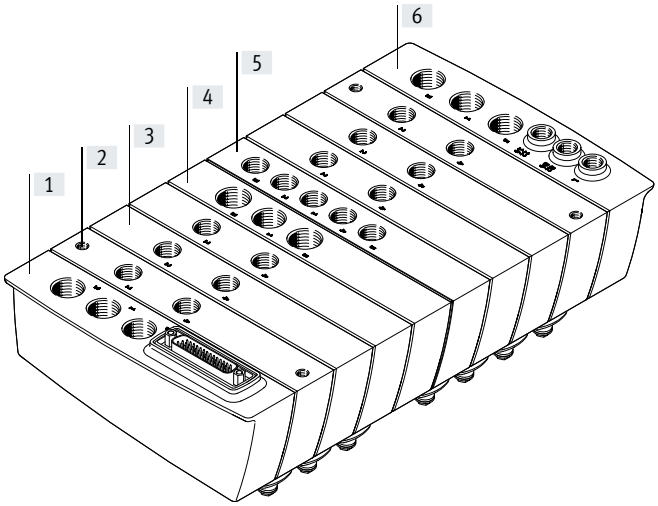

[1] Left-hand end plate with electrical connection (multi-pin or I-Port interface/IO-Link) and pneumatic ports 1, 3 and 5
[2] Sub-base with mounting holes and pneumatic ports 2 and 4
[3] Sub-base without mounting holes and pneumatic ports 2 and 4
[4] Power supply module with pneumatic ports 1, 3 and 5
[5] Sub-base with additional supply, with pneumatic ports 1, 3, 5 and 2, 4
[6] Right-hand end plate with pneumatic ports 1, 3, 5 and L, 12/14, 82/84

Note

If a gradual pressure build-up in the system using a soft-start valve is selected, an external pilot air supply should be connected so the pilot pressure applied during switch-on is already at full pressure.

Key features – Pneumatic components

Compressed air supply and pilot air supply			
Illustration	Code	Type	Information
Right-hand end plate			
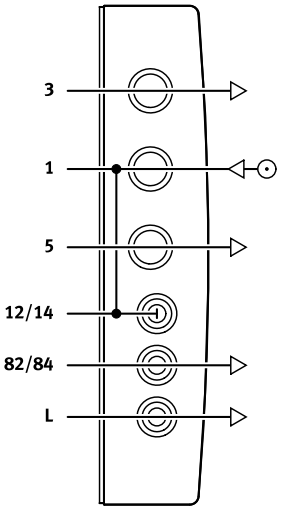	Pilot air: Z	VMPAC-EPR-IN	Internal pilot air supply • Pilot air is branched internally from port 1 in the right-hand end plate • For operating pressure in the range 0.3 ... 0.8 MPa • Thread connection size G3/8 (port 1, port 3 and port 5) • Thread connection size G1/8 (port 82/84 and port L) • Blanking plug in port 12/14
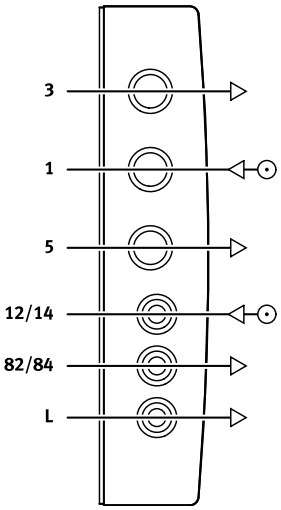	Pilot air: –	VMPAC-EPR-EX	External pilot air supply • Pilot air supply (0.3 ... 0.8 MPa) is connected at port 12/14 on the right-hand end plate • For operating pressure in the range –0.09 ... 0.8 MPa (suitable for vacuum) • Thread connection size G3/8 (port 1, port 3 and port 5) • Thread connection size G1/8 (port 12/14, 82/84 and port L)
Left-hand end plate			
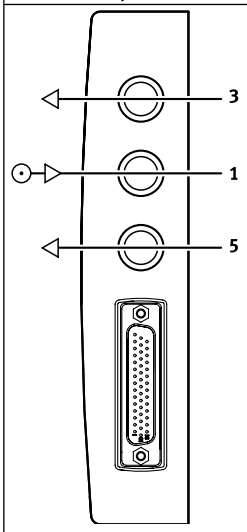	Outlet, electrical connection: U	VMPAC-EPL...	With electrical connection (multi-pin connection or I-Port interface/IO-Link) and pneumatic ports 1, 3 and 5: • Electrical connection, outlet direction on top • Electrical connection, outlet direction underneath • Thread connection size G3/8

Key features – Pneumatic components

Compressed air supply and pilot air supply			
Illustration	Code	Type	Information
Supply module			
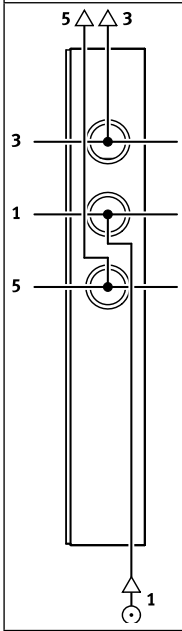	Type of module block 1-40: U	VMPAC-SP-0	Additional power supply modules can be used for larger terminals or to create pressure zones. Power supply modules can be configured at any point upstream or downstream from the sub-bases. Power supply modules contain the following ports: • Compressed air supply (port 1) • Exhaust air (port 3 and port 5) • Thread connection size G3/8
Sub-base, with additional pneumatic supply			
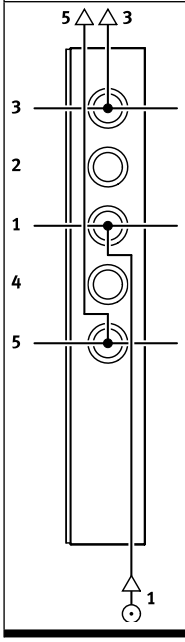	Sub-base with additional pneumatic supply 01 - 40: PV	VMPAC-AP-14-SP...	Sub-bases with an additional power supply can be used for larger terminals or to create pressure zones. Sub-bases with additional supply contain the following ports: • Compressed air supply (port 1) • Exhaust air (port 3 and port 5) • Thread connection size G1/4

Key features – Pneumatic components

Creating pressure zones and separating exhaust air

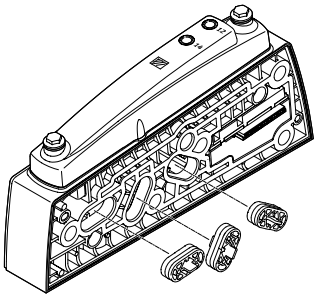

The MPA-C offers a number of options for creating pressure zones if different working pressures are required.
Duct 1 and/or duct 3 and/or duct 5 are interrupted by inserting a separator in the sub-base. Every pressure zone must have its own supply.
The following supply options are available:

- Left-hand end plate
- Right-hand end plate
- Supply module

If you are using sub-bases with an additional supply, every valve in the valve terminal could be operated within a separate pressure zone.
A pressure zone is created by separating the internal supply ducts using a special separator. Every pressure zone must have its own compressed air supply.
Compressed air can be supplied and exhausted via a supply module and/or the right-hand end plate.
The MPA-C allows you to select any position for the supply modules and the sub-bases with pressure zone separation.

The sub-bases with pressure zone separation are integrated into the terminal at the factory as specified in your order.
They can be distinguished by their coding, even when the valve terminal is assembled. Duct separation is always to the right of the sub-base.

Example: compressed air supply and pilot air supply

External pilot air supply

The image opposite shows an example of creating and connecting an air supply in the case of an external pilot air supply.
The pilot air (duct 12/14) is supplied centrally to the entire valve terminal via the right-hand end plate.
Pressure zone separation is always to the right of the sub-base with separator(s).

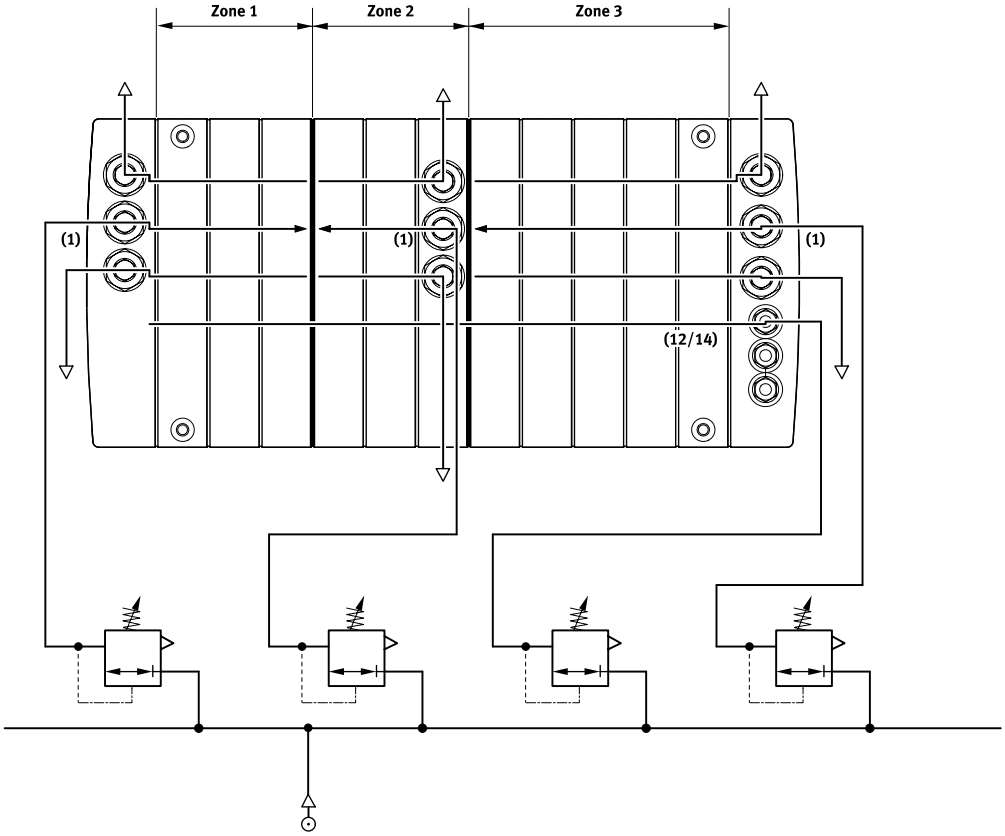

Key features – Mounting

Sub-base

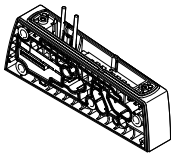

The MPA-C is based on a modular system consisting of sub-bases and valves. The sub-bases are connected by tie rods and thus form the support system for the valves.
They contain the connection ducts for supplying compressed air to and venting from the valve terminal as well as the working ports for the pneumatic drives for each valve.
The sub-bases are joined together via tie rods. The tie rod consists of a threaded rod, threaded sleeve and screw.
In principle, sub-bases have a modular structure.

The threaded rod/sleeve combination is selected according to the number and width of the individual sub-bases. To add further blocks, simply loosen the tie rod and adapt with extenders.

There are no restrictions on extensions; a tie rod could be constructed almost entirely using extenders.
Every solenoid coil must be assigned to a specific pin of the multi-pin plug for the valve to be activated. Regardless of whether vacant positions or valves are used, sub-bases occupy:

- One coil/address (single solenoid valves)
- Two coils/addresses (double solenoid valves)

Valve terminal mounting

Sub-bases with threaded holes are available for the valve terminal MPA-C. The valve terminal can thus be mounted either in a control cabinet or on any even surface using spacer bolts.
It can be mounted in any position. However, it should be mounted in such a way that dirt can be cleaned off and cleaning agent can run off.
The mounting surface must be able to support the weight of the valve terminal and any forces that arise, and must enable torsion-free mounting.

Sub-bases directly connected to the right and left-hand end plates and every fifth sub-base within the valve terminal must be provided as a version with mounting holes.

Mounting with tubing through-feed

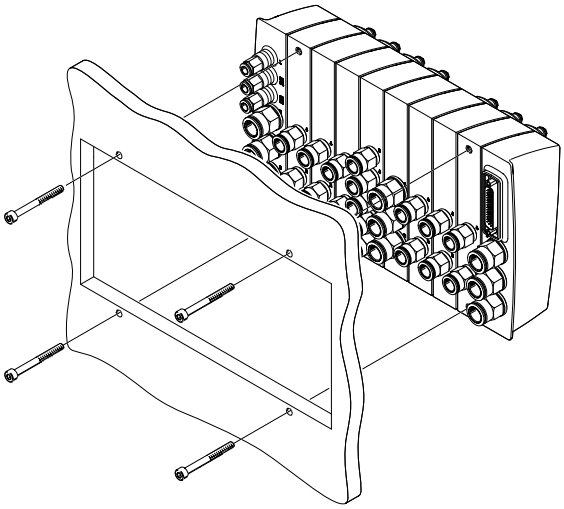

Mounting with spacer bolts

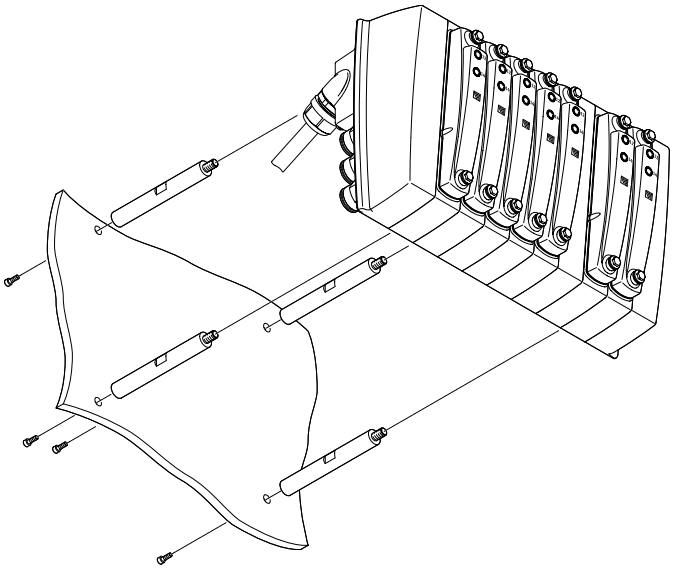

Key features – Mounting

Tie rods

Configuration

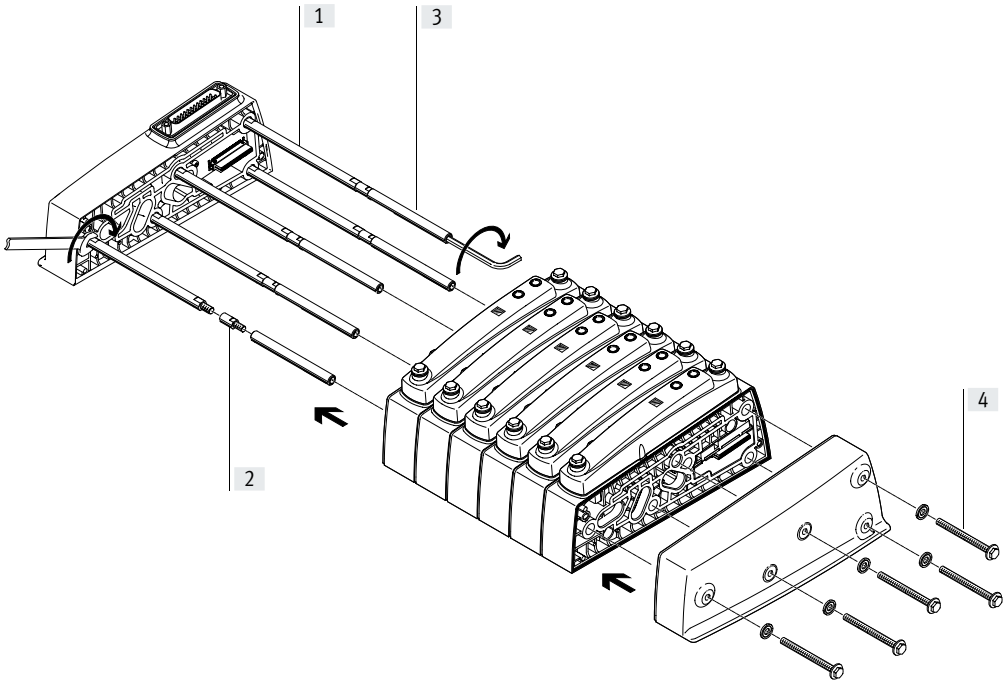

[1] Threaded rod
[2] Tie rod extender
[3] Sleeve
[4] Screw

Mode of operation

The tie rod for the MPA-C consists of four parts:
- Threaded rod
- Tie rod extender
- Sleeve
- Screw

This enables valve terminals of any length to be created.
It takes just 4 steps to assemble the tie rod and the valve terminal:
- Screw the sleeves to the threaded rods
- Push the rod/sleeve combination into the tie rod shafts of the sub-bases and push the supply modules onto the left-hand end plate
- Screw the rod/sleeve combination onto the left-hand end plate
- Push on the right-hand end plate and secure with screws that engage into the sleeves

The tie rod enables the valve terminal to be extended at a later date. This is done by loosening the tie rod screws and disassembling the relevant components. The additional sub-base or supply module is inserted at the required location. The previously disassembled components are then re-assembled.
To compensate for the change in length, the tie rod must be extended by the increase in length. This is done by screwing in extenders between the threaded rod and sleeve.

Note

To ensure the valve terminal is properly sealed, you must:
- Check the seals between the sub-bases and replace them, if necessary, before the assembly stage during a conversion
- Tighten the tie rod screws in the correct order
- Tighten the tie rod screws to the correct torque

Key features – Mounting

Tie rod – Components and design			
Tie rod (threaded rod)	Tie rod extender	Sleeve	Screw
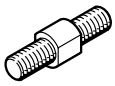	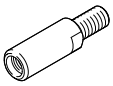	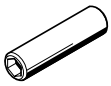	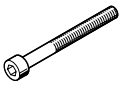
The threaded rod is used to create a cost-optimised fixed-grid tie rod.	The valve terminal can be extended almost infinitely at any time using tie rod extenders. The tie rod extenders are inserted between the threaded rod and the sleeve.	The primary purpose of the sleeve is to compensate for tolerances that occur, for example, when the seals are compressed between the sub-bases during assembly. The sleeves come in different lengths, tailored to the use of a tie rod in a fixed grid as well as generally for the individual modular tie rods.	The entire valve terminal is clamped via the tie rod using the screw. Tolerances that occur, for example when the seals are compressed between the sub-bases during assembly, are compensated by the interaction of the screw and sleeve.
Individual modular tie rod			
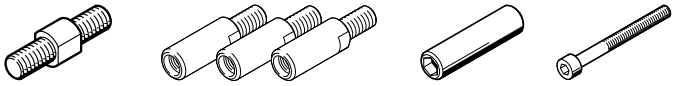		Tie rods can be constructed entirely using tie rod extenders. The threaded rod and sleeve are required to compensate for tolerances that occur, for example,	when the seals are compressed between the sub-bases during assembly.
Fixed-grid tie rod with extension			
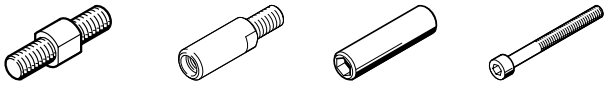		The tie rod extenders are inserted between the threaded rod and the sleeve.	They are available in suitable lengths for sub-bases and supply modules.
Fixed-grid tie rod			
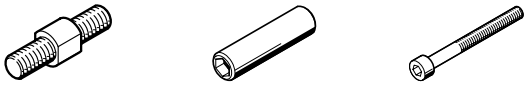		The fixed-grid tie rod minimises assembly costs when assembling previously specified valve terminals. These valve terminals can be extended at any time.	The threaded rod and, if applicable, the sleeve must be replaced if the valve terminal length is reduced.

Key features – Mounting

Ordering data – Fixed-grid tie rod						
Number of sub-bases and supply modules	Tie rods		Sleeve		Tie rod extender	
	Part no.	Type	Part no.	Type	Part no.	Type
1	**8025286**	**VMPAC-ZAS-5**	**8025283**	**VMPAC-ZAH-46**	**–**	**–**
2	**8025286**	**VMPAC-ZAS-5**	**8025285**	**VMPAC-ZAH-66**	**–**	**–**
3	**8025287**	**VMPAC-ZAS-45**	**8025284**	**VMPAC-ZAH-56**	**–**	**–**
4	**8025288**	**VMPAC-ZAS-85**	**8025283**	**VMPAC-ZAH-46**	**–**	**–**
5	**8025288**	**VMPAC-ZAS-85**	**8025285**	**VMPAC-ZAH-66**	**–**	**–**
6	**8025289**	**VMPAC-ZAS-125**	**8025284**	**VMPAC-ZAH-56**	**–**	**–**
7	**8025290**	**VMPAC-ZAS-165**	**8025283**	**VMPAC-ZAH-46**	**–**	**–**
8	**8025291**	**VMPAC-ZAS-205**	**8025282**	**VMPAC-ZAH-36**	**–**	**–**
9	**8025291**	**VMPAC-ZAS-205**	**8025284**	**VMPAC-ZAH-56**	**–**	**–**
10	**8025292**	**VMPAC-ZAS-245**	**8025283**	**VMPAC-ZAH-46**	**–**	**–**
11	**8025293**	**VMPAC-ZAS-285**	**8025282**	**VMPAC-ZAH-36**	**–**	**–**
12	**8025293**	**VMPAC-ZAS-285**	**8025285**	**VMPAC-ZAH-66**	**–**	**–**
13	**8025294**	**VMPAC-ZAS-325**	**8025283**	**VMPAC-ZAH-46**	**–**	**–**
14	**8025295**	**VMPAC-ZAS-365**	**8025282**	**VMPAC-ZAH-36**	**–**	**–**
15	**8025295**	**VMPAC-ZAS-365**	**8025285**	**VMPAC-ZAH-66**	**–**	**–**
16	**8025296**	**VMPAC-ZAS-405**	**8025284**	**VMPAC-ZAH-56**	**–**	**–**
17	**8025297**	**VMPAC-ZAS-445**	**8025282**	**VMPAC-ZAH-36**	**–**	**–**
18	**8025297**	**VMPAC-ZAS-445**	**8025285**	**VMPAC-ZAH-66**	**–**	**–**
19	**8025298**	**VMPAC-ZAS-485**	**8025284**	**VMPAC-ZAH-56**	**–**	**–**
20	**8025299**	**VMPAC-ZAS-525**	**8025282**	**VMPAC-ZAH-36**	**–**	**–**
21	**8025299**	**VMPAC-ZAS-525**	**8025285**	**VMPAC-ZAH-66**	**–**	**–**
22	**8025300**	**VMPAC-ZAS-565**	**8025284**	**VMPAC-ZAH-56**	**–**	**–**
23	**8025301**	**VMPAC-ZAS-605**	**8025283**	**VMPAC-ZAH-46**	**–**	**–**
24	**8025301**	**VMPAC-ZAS-605**	**8025285**	**VMPAC-ZAH-66**	**–**	**–**
25	**8025302**	**VMPAC-ZAS-645**	**8025284**	**VMPAC-ZAH-56**	**–**	**–**
26	**8025303**	**VMPAC-ZAS-685**	**8025283**	**VMPAC-ZAH-46**	**–**	**–**
27	**8025303**	**VMPAC-ZAS-685**	**8025285**	**VMPAC-ZAH-66**	**–**	**–**
28	**8025304**	**VMPAC-ZAS-725**	**8025284**	**VMPAC-ZAH-56**	**–**	**–**
29	**8025305**	**VMPAC-ZAS-765**	**8025283**	**VMPAC-ZAH-46**	**–**	**–**
30	**8025305**	**VMPAC-ZAS-765**	**8025284**	**VMPAC-ZAH-56**	**8038824**	**VMPAC-ZAE-20**
31	**8025306**	**VMPAC-ZAS-805**	**8025284**	**VMPAC-ZAH-56**	**–**	**–**
32	**8025307**	**VMPAC-ZAS-845**	**8025283**	**VMPAC-ZAH-46**	**–**	**–**
33	**8025307**	**VMPAC-ZAS-845**	**8025284**	**VMPAC-ZAH-56**	**8038824**	**VMPAC-ZAE-20**
34	**8025308**	**VMPAC-ZAS-885**	**8025285**	**VMPAC-ZAH-66**	**–**	**–**
35	**8025309**	**VMPAC-ZAS-925**	**8025283**	**VMPAC-ZAH-46**	**–**	**–**
36	**8025309**	**VMPAC-ZAS-925**	**8025284**	**VMPAC-ZAH-56**	**8038824**	**VMPAC-ZAE-20**
37	**8025310**	**VMPAC-ZAS-965**	**8025285**	**VMPAC-ZAH-66**	**–**	**–**
38	**8025311**	**VMPAC-ZAS-1005**	**8025283**	**VMPAC-ZAH-46**	**–**	**–**
39	**8025311**	**VMPAC-ZAS-1005**	**8025284**	**VMPAC-ZAH-56**	**8038824**	**VMPAC-ZAE-20**
40	**8025312**	**VMPAC-ZAS-1045**	**8025285**	**VMPAC-ZAH-66**	**–**	**–**

Key features – Display and operation

Display and operation

Signal status indication

Every solenoid coil is allocated an LED that indicates its signal status.

- Indicator 12 shows the signal status of the coil for duct 2
- Indicator 14 shows the signal status of the coil for duct 4

Manual override

The manual override (MO) enables the valve to be switched when not electrically activated or energised.
The valve is switched by pushing the manual override.

Cover

The inspection window for signal display and valve identification and the mechanism of the manual override are in the cover.

The valves below are nevertheless always fitted with switching status indicators and manual override.

Display and operating components

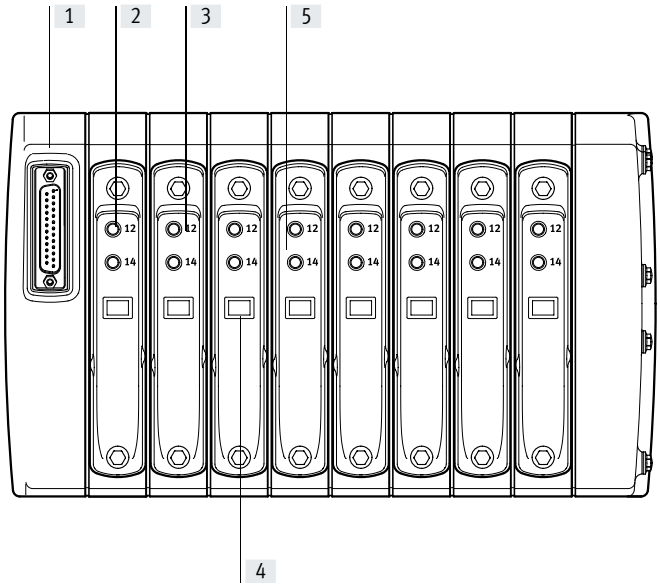

[1] Left-hand end plate with electrical connection (multi-pin plug or I-Port interface/IO-Link)
[2] Manual override (per pilot solenoid coil, non-detenting)
[3] Signal status display (per pilot solenoid coil)
[4] Inspection window for valve identification
[5] Cover without manual override

Note

A manually actuated valve (using the manual override) cannot be reset electrically.
Conversely, an electrically actuated valve cannot be reset by the manual override.

Manual override (MO)

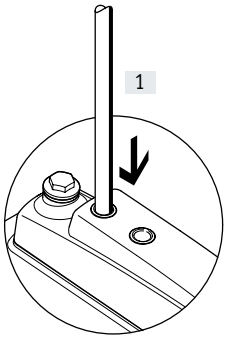

[1] Press in the plunger of the MO with a blunt plastic pin.
The pilot valve switches and actuates the main valve.

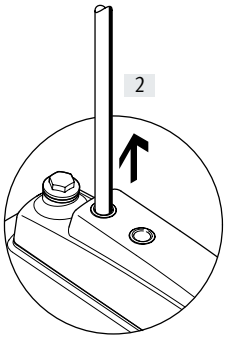

[2] Remove pin.
The spring force pushes the plunger of the manual override back.
The pilot valve returns to the normal position as does the single solenoid main valve (this is not the case with a double solenoid valve).

Key features – Display and operation

Display and operation

Labelling

The following can be used as labels:
- Laminated thermal transfer stickers
- Laser-printed stickers
- Laser printing directly onto the valve terminal surface

Labels can be applied to all sides of the valve terminal and to its individual components.

The possible size of the labelling surfaces can be taken from the dimensional drawing
(➔ page 30)
It is not possible to label the valves located beneath covers in addition to the information printed by the manufacturer.

The valve positions are therefore labelled on the covers or on the sub-bases

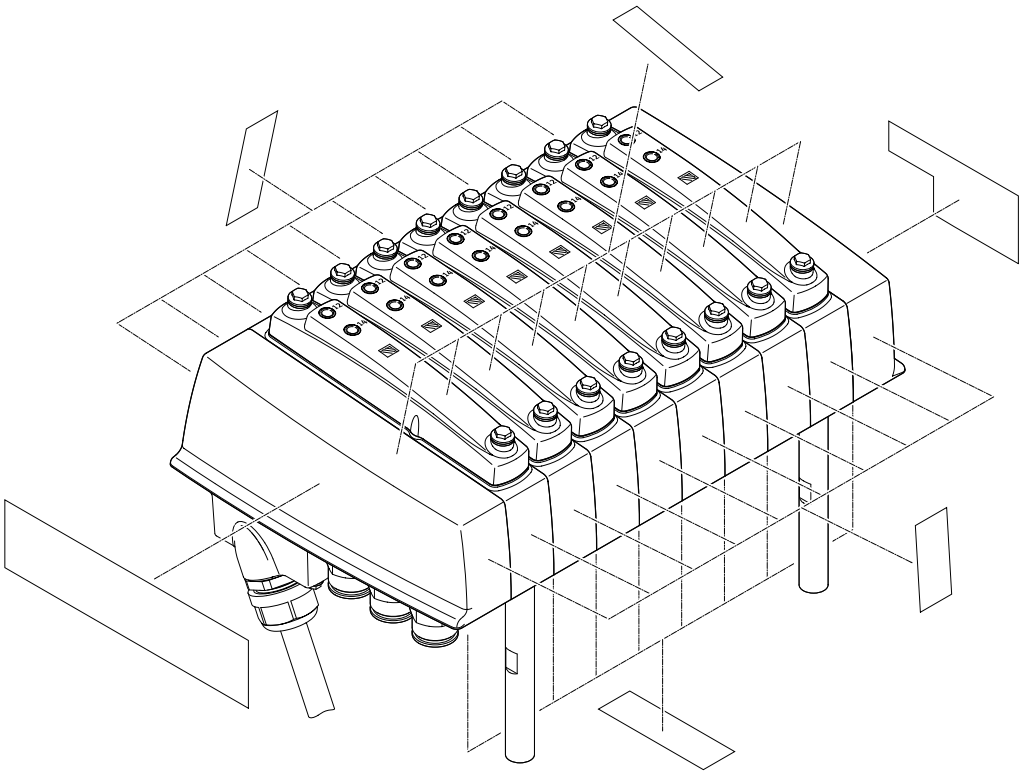

Note

When applying labels, the requirements in terms of cleaning and environmental emissions must be observed, especially for stick-on labels.

Key features – Electric components

Electrical power as a result of current reduction

Every solenoid coil is protected with a spark arresting protective circuit as well as against polarity reversal.
All valve types also have an integrated current reduction.

MPA-C valves are supplied with operating voltage 24 V (permissible voltage fluctuations +/–25%).

Electrical connection – Left-hand end plate

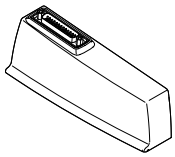

The electrical connection from the valves to the higher-order controller is in the left-hand end plate.
Switching between the various connection options is easy: simply swap the left-hand end plate; the pneumatic connections remains as they are.

The valves are switched by positive or negative logic (PNP or NPN). Mixed operation is not permitted.

Guidelines on addressing for valves/solenoid coils

The addresses are numbered from left to right in ascending order. The following applies for the individual valve positions: address x for coil 14 and address x+1 for coil 12.

Every sub-base occupies a specific number of addresses/pins:
- For 1 solenoid coil: 1
- For 2 solenoid coils: 2

Note

If a single solenoid valve is assembled on a double solenoid valve position, the second address (for coil 12) is also assigned and cannot be used.

Variants of the left-hand end plate

Illustration	Code	Type	Maximum number of addresses	Information
Outlet, electrical connection on top				
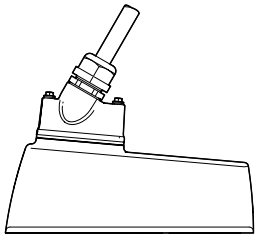	Electrical connection: MS1	VMPAC-EPL-MP-SD25-O	24	Electrical connection: Sub-D, 25-pin
	Electrical connection: MS3	VMPAC-EPL-MP-SD44-O	32	Electrical connection: Sub-D, 44-pin
	Electrical connection: PT	VMPAC-EPL-IP-O	32	Electrical connection Sub-D, 9-pin I-Port interface/IO-Link
Outlet, electrical connection underneath				
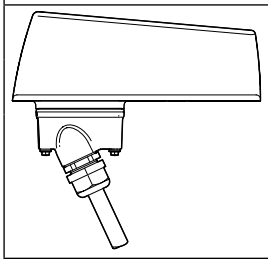	Electrical connection: MS1	VMPAC-EPL-MP-SD25	24	Electrical connection: Sub-D, 25-pin
	Electrical connection: MS3	VMPAC-EPL-MP-SD44	32	Electrical connection: Sub-D, 44-pin
	Electrical connection: PT	VMPAC-EPL-IP	32	Electrical connection Sub-D, 9-pin I-Port interface/IO-Link

Key features – Electric components

Pin allocation for electrical multi-pin plug connection – Sub-D plug, 25-pin, connecting cable NEBV-C-S1WA25...

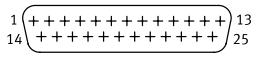

Pin	Address/ coil	Wire colour[2] of connecting cable	Pin	Address/ coil	Wire colour[2] of connecting cable
1	0	WH	14	13	BN GN
2	1	BN	15	14	YE WH
3	2	GN	16	15	BN YE
4	3	YE	17	16	GY WH
5	4	GY	18	17	BN GY
6	5	PK	19	18	WH PK
7	6	BU	20	19	BN PK
8	7	RD	21	20	BU WH
9	8	BK	22	21	BN BU
10	9	VT	23	22	RD WH
11	10	GY PK	24	23	BN RD
12	11	RD BU	25	0 V[1]	BK WH
13	12	GN WH			

Note

The drawing shows the view onto the pins of the Sub-D plug.

1) 0 V with positive-switching control signals; in the case of negative-switching control signals, connect 24 V; mixed operation is not permitted!
2) To IEC 757

Pin allocation for electrical multi-pin plug connection – Sub-D plug, 44-pin, connecting cable NEBV-C-S1WA44...

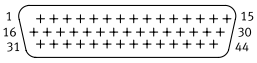

Pin	Address/ coil	Wire colour[2] of connecting cable	Pin	Address/ coil	Wire colour[2] of connecting cable	Pin	Address/ coil	Wire colour[2] of connecting cable
1	0	WH	18	17	BN GY	35	n.c.	n.c.
2	1	BN	19	18	WH PK	36	n.c.	n.c.
3	2	GN	20	19	BN PK	37	n.c.	n.c.
4	3	YE	21	20	BU WH	38	n.c.	n.c.
5	4	GY	22	21	BN BU	39	n.c.	n.c.
6	5	PK	23	22	RD WH	40	n.c.	n.c.
7	6	BU	24	23	BN RD	41	n.c.	RD GN
8	7	RD	25	24	BK WH	42	n.c.	RD YE
9	8	BK	26	25	BK BN	43	0 V[1]	BK GN
10	9	VT	27	26	GN GY	44	0 V[1]	BK YE
11	10	GY PK	28	27	YE GY			
12	11	RD BU	29	28	GN PK			
13	12	GN WH	30	29	YE PK			
14	13	BN GN	31	30	GN BU			
15	14	YE WH	32	31	YE BU			
16	15	BN YE	33	n.c.	n.c.			
17	16	GY WH	34	n.c.	n.c.			

Note

The drawing shows the view onto the pins of the Sub-D plug.

1) 0 V with positive-switching control signals; in the case of negative-switching control signals, connect 24 V; mixed operation is not permitted!
2) To IEC 757

Key features – Electric components

I-Port interface/IO-Link

The I-Port interface/IO-Link enables the valve terminal MPA-C to be connected to the following systems:
- I-Port master from Festo (CPX terminal)
- Bus node CTEU from Festo
- IO-Link master

The maximum distance between the I-Port/IO-Link master and valve terminal with I-Port interface/IO-Link is 20 m.

The 5-pin connecting cables contain the power supply for the valves; the power supply for the internal valve terminal electronics and the control signals are separate from this.

Note

More information can be found at:
➔ Internet: cteu

Pin allocation for I-Port interface/IO-Link – Sub-D plug, 9-pin, connecting cable NEBC-C-S1WA9...

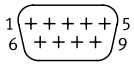

Pin	Designation	Wire colour[1] of connecting cable
1	Communication signal C/Q, data transmission line	BK
2	0 V DC load voltage supply for valves and outputs	GY
3	0 V DC supply voltage for electronics and sensors	BU
4	24 V DC load voltage supply for valves and outputs	WH
5	24 V DC supply voltage for electronics and inputs	BN
6	n.c.	n.c.
7	n.c.	n.c.
8	n.c.	n.c.
9	n.c.	n.c.

Note

The drawing shows the view onto the Sub-D plug on the I-Port interface/IO-Link.

1) To IEC 757

Key features – Electric components

Instructions for use

Service fluids		Bio-oils	Mineral oils
Operate your system with unlubricated compressed air, if possible. Festo valves and cylinders are designed so that, if used as intended, they will not require additional lubrication and will still achieve a long service life. The quality of compressed air downstream of the compressor must correspond to that of unlubricated compressed air. If possible, do not operate the entire system with lubricated compressed air. The lubricators should, where possible, always be installed directly upstream of the actuator requiring them.	Incorrect additional oil and too high an oil content in the compressed air reduce the service life of the valve terminal. Use Festo special oil OFSW-32 or the alternatives listed in the Festo catalogue (as specified in DIN 51524 HLP32; basic oil viscosity 32 CST at 40°C).	When using bio-oils (oils which are based on synthetic or native esters, e.g. rapeseed oil methyl ester), the maximum residual oil content of 0.1 mg/m^3 must not be exceeded (see ISO 8573-1 Class 2).	When using mineral oils (e.g. HLP oils to DIN 51524, parts 1 to 3) or similar oils based on poly-alpha-olefins (PAO), the maximum residual oil content of 5 mg/m^3 must not be exceeded (see ISO 8573-1 Class 4). A higher residual oil content is not permitted, regardless of the compressor oil, because permanent lubrication would otherwise be flushed out over a period of time.

Datasheet

- Flow rate
  up to 780 l/min

- Valve width
  14 mm

- Voltage
  24 V DC

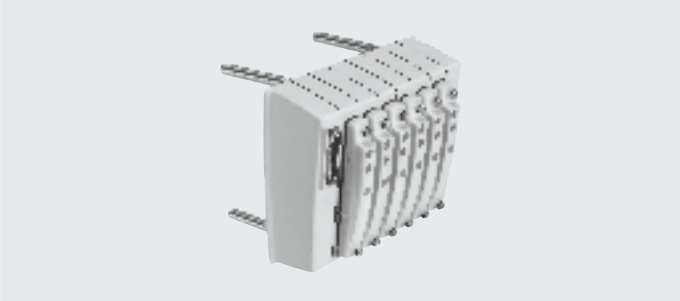

General technical data		
Valve terminal design		Modular and expandable
Electrical control		Multi-pin plug
		I-Port interface/IO-Link
Actuation type		Electrical system
Type of control		Electrical system
Nominal operating voltage	[V DC]	24
Permissible voltage fluctuations	[%]	±25
Maximum number of valve positions		32
Maximum number of pressure zones		32
Valve sizes	[mm]	14
Signal status indication		LED
Pilot air supply		Internal or external
Degree of protection		IP65, IP67, IP69K

Operating and environmental conditions		
Operating medium		Compressed air to ISO 8573-1:2010 [7:4:4] ➔ page 22
Note on the operating/ pilot medium		Lubricated operation possible (in which case lubricated operation will always be required)
Operating pressure	[MPa]	−0.09 ... +0.8
	[bar]	−0.9 ... +8
Operating pressure for valve terminal with internal pilot air supply	[MPa]	0.3 ... 0.8
	[bar]	3 ... 8
	[psi]	43.5 ... 116
Pilot pressure	[MPa]	0.3 ... 0.8
	[bar]	3 ... 8
Ambient temperature	[°C]	−5 ... +60
Temperature of medium	[°C]	−5 ... +50
Storage temperature	[°C]	−20 ... +40
Corrosion resistance class CRC[1]		4
CE marking (see declaration of conformity)[3]		To EU EMC Directive[2]
		To EU RoHS Directive
KC mark		KC EMC
UKCA marking (see declaration of conformity)[3]		To UK instructions for EMC
		To UK RoHS regulations
LABS (PWIS) conformity		VDMA24364-B1/B2-L
Food-safe[3]		See supplementary material information
Approval		UL – Recognized (OL)
		RCM

1) Additional information: www.festo.com/x/topic/kbk
2) For information about the area of use, see the EC declaration of conformity at: www.festo.com/catalogue/... ➔ Support/Downloads.
If the devices are subject to usage restrictions in residential, commercial or light-industrial environments, further measures for the reduction of the emitted interference may be necessary.
3) Additional information: www.festo.com/catalogue/... ➔ Support/Downloads.

Safety characteristics	
Shock resistance	Shock test with severity level 2 to FN 942017-5 and EN 60068-2-27
Vibration resistance	Transport application test with severity level 2 to FN 942017-4 and EN 60068-2-6

Datasheet

Technical data – Valves										
Code for position function 1-32			M	J	N	K	H	B	G	E
Design			Piston spool valve							
Sealing principle			Soft							
Overlap			Positive overlap							
Manual override			Non-detenting, detenting							
Type of control			Piloted							
Reset method			Pneumatic spring	–	Pneumatic spring			Mechanical spring		
Switching times	On	[ms]	13	9	9	10	10	12	10	12
	Off	[ms]	20	–	28	28	26	40	40	40
	Change-over	[ms]	–	24	–	–	–	18	20	18
Standard nominal flow rate		[l/min]	550 ... 670	550 ... 670	550 ... 650	550 ... 600	550 ... 650	550 ... 630	500 ... 610	420 ... 480
Note on standard nominal flow rate		[l/min]	MPA-C: 720	MPA-C: 770	MPA-C: 730	MPA-C: 760	MPA-C: 730	MPA-C: 690	MPA-C: 660	MPA-C: 550
		[l/min]	MPA-L: 670	MPA-L: 670	MPA-L: 650	MPA-L: 600	MPA-L: 650	MPA-L: 630	MPA-L: 610	MPA-L: 480
		[l/min]	MPA-S: 550	MPA-S: 550	MPA-S: 550	MPA-S: 550	MPA-S: 550	MPA-S: 550	MPA-S: 500	MPA-S: 420
Flow direction			Reversible	Reversible	Not reversible	Not reversible	Not reversible	Reversible	Reversible	Reversible
Suitable for vacuum			Yes	Yes	No	No	No	Yes	Yes	Yes
Operating pressure		[MPa]	–0.09 ... +1		0.3 ... 1			–0.09 ... +1		
		[bar]	–0.9 ... +10		3 ... 10			–0.9 ... +10		
Pilot pressure		[MPa]	0.3 ... 0.8							
		[bar]	3 ... 8							
Type of mounting			With through-hole							
Maximum tightening torque for valve mounting		[Nm]	0.65							

Technical data – Valves											
Code for position function 1-32			X	W	D	I	MS	NS	KS	HS	DS
Design			Piston spool valve								
Sealing principle			Soft								
Overlap			Positive overlap								
Manual override			Non-detenting, detenting								
Type of control			Piloted								
Reset method			Pneumatic spring				Mechanical spring				
Switching times	On	[ms]	12	12	9	10	13	12	12	12	10
	Off	[ms]	20	20	26	28	41	20	20	20	20
	Change-over	[ms]	–	–	–	–	–	–	–	–	–
Standard nominal flow rate		[l/min]	360 ... 400	300 ... 340	550 ... 650	550 ... 670	550 ... 670	470 ... 520	470 ... 560	470 ... 520	500 ... 570
Note on standard nominal flow rate		[l/min]	MPA-C: 510	MPA-C: 450	MPA-C: 720	MPA-C: 730	MPA-C: 730	MPA-C: 550	MPA-C: 600	MPA-C: 550	MPA-C: 570
		[l/min]	MPA-L: 400	MPA-L: 300	MPA-L: 650	MPA-L: 670	MPA-L: 670	MPA-L: 520	MPA-L: 560	MPA-L: 520	MPA-L: 570
		[l/min]	MPA-S: 360	MPA-S: 340	MPA-S: 550	MPA-S: 550	MPA-S: 550	MPA-S: 470	MPA-S: 470	MPA-S: 470	MPA-S: 500
Flow direction			Reversible	Reversible	Not reversible	Not reversible	Reversible	Reversible	Reversible	Reversible	Reversible
Suitable for vacuum			Yes	Yes	No	No	Yes	Yes	Yes	Yes	Yes
Operating pressure		[MPa]	–0.09 ... +1		0.3 ... 1		–0.09 ... +0.8				
		[bar]	–0.9 ... +10		3 ... 10		–0.9 ... +8				
Pilot pressure		[MPa]	0.3 ... 0.8								
		[bar]	3 ... 8								
Type of mounting			With through-hole								
Maximum tightening torque for valve mounting		[Nm]	0.65								

Safety characteristics – Valves		
Maximum positive test pulse with logic 0	[µs]	400
Maximum negative test pulse with logic 1	[µs]	200
Shock resistance		Shock test with severity level 2 to FN 942017-5 and EN 60068-2-27
Vibration resistance		Transport application test with severity level 2 to FN 942017-4 and EN 60068-2-6

Datasheet

Pneumatic connections		
Right-hand end plate		
Supply	1	G3/8 thread
Exhaust port	3	G3/8 thread
	5	G3/8 thread
	L	G1/8 thread
Pilot air supply	12/14	G1/8 thread
Pilot exhaust air	82/84	G1/8 thread
Left-hand end plate		
Supply	1	G3/8 thread
Exhaust port	3	G3/8 thread
	5	G3/8 thread
Supply module		
Supply	1	G3/8 thread
Exhaust port	3	G3/8 thread
	5	G3/8 thread
Sub-base		
Working ports	2	G1/4 thread
	4	G1/4 thread
Sub-base with additional pneumatic supply		
Supply	1	G1/4 thread
Exhaust port	3	G1/4 thread
	5	G1/4 thread
Working ports	2	G1/4 thread
	4	G1/4 thread

Datasheet

Pilot pressure p2 as a function of working pressure p1 with external pilot air supply

For valves with code for position function 1-32: M, J, B, G, E, W, X

For valves with code for position function 1-32: N, K, H, D, I

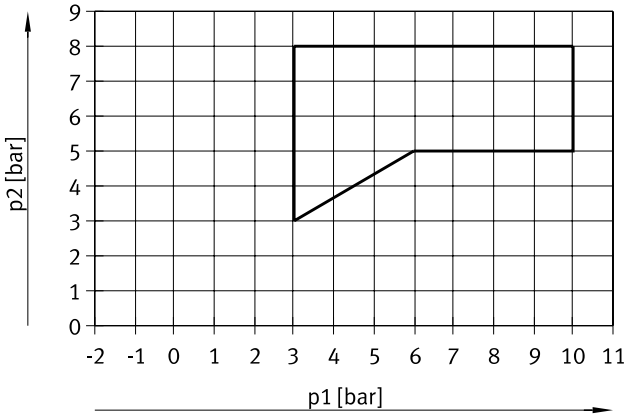

For valves with code for position function 1-32: MS, NS, KS, HS, DS

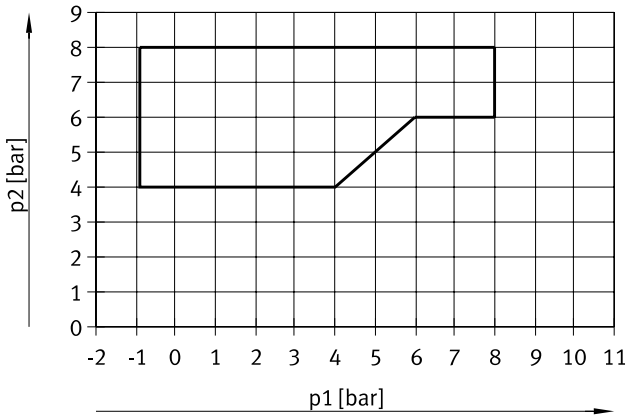

Current consumption per solenoid coil at nominal voltage		
Nominal pick-up current	[mA]	50
Nominal current with current reduction	[mA]	10
Time until current reduction	[ms]	20

Materials	
Sub-base	Reinforced PA
Supply module	Reinforced PA
End plate	Reinforced PA
Valve	Die-cast aluminium
Cover	Reinforced PA
Seals	EPDM, NBR
Separator for pressure zone separation	Reinforced PA, NBR
Tie rods	Stainless steel
Spacer bolt	Stainless steel
Note on materials	RoHS-compliant

Datasheet

Product weight	
	Approx. weight [g]
Sub-base	160
Supply module	156
Left-hand end plate	246
Right-hand end plate	224
Valve	77
Cover	42
Vacant position	23
Separator for pressure zone separation	15
Screw for tie rod	3
Sleeve for tie rod, 36/46/56/66 mm	6/8/9/11
Tie rod extender, 21/27 mm	3/4
Spacer bolt	80

Product weight – Threaded rods, tie rods																
Length [mm]	5	45	85	125	165	205	245	285	325	365	405	445	485	525	565	605
Threaded rods, tie rods [g]	2	11	20	29	38	47	54	65	72	80	89	98	109	118	127	136
Length [mm]	645	685	725	765	786	805	845	866	885	925	946	965	1005	1026	1045	
Threaded rods, tie rods [g]	145	154	163	170	174	181	188	192	198	205	209	214	225	229	234	

Datasheet

Dimensions Download CAD data ➔ www.festo.com

Valve terminal

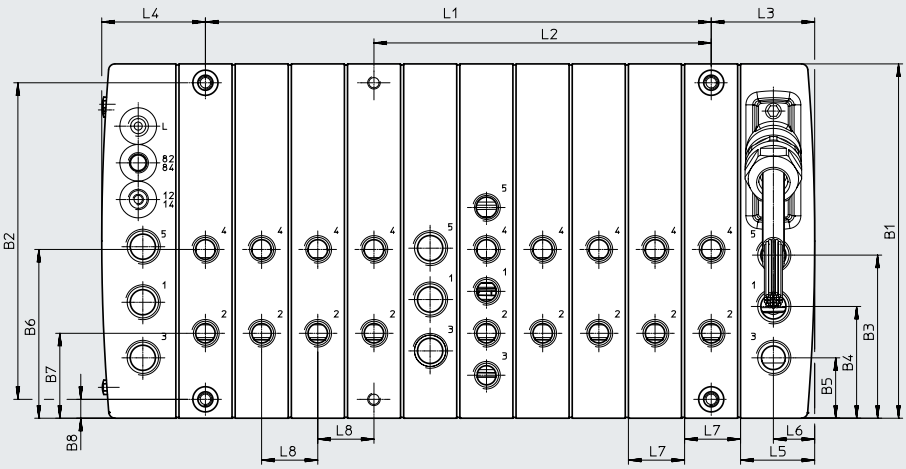

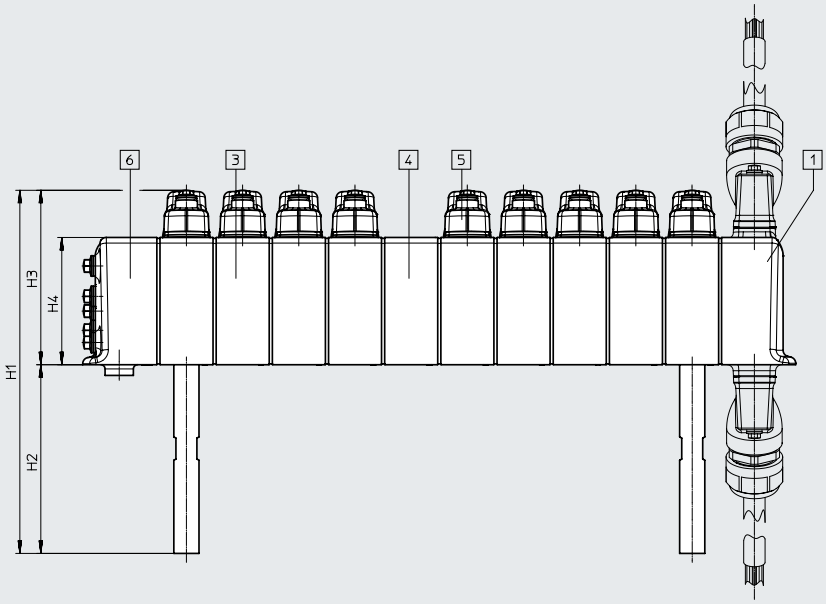

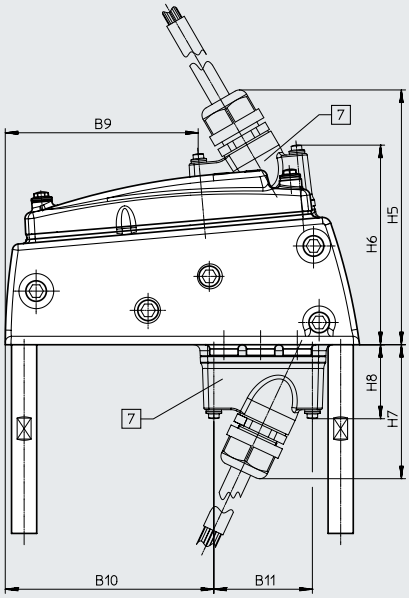

[1] Left-hand end plate, electrical connection
[3] Sub-base
[4] Power supply module
[5] Covering
[6] Right-hand end plate
[7] Electrical connection

Type	B1	B2	B3	B4	B5	B6	B7	B8	B9	B10	B11	H1	H2	H3	H4	H5
MPA-C	169	151	77.8	53.3	28.8	80.5	40.5	9	92	99.5	47	172.7	90	82.7	60.7	121.5

Type	H6	H7	H8	L1	L2	L3	L4	L5	L6	L7	L8
MPA-C	95.2	64.9	36.4	(n–1) x 26.8	(n-1) x 26.8	49.6	49.5	35.4	19.7	26.8	26.8

1) n = total number of sub-bases/valve positions and supply modules

Datasheet

Dimensions – Pneumatic connections

Download CAD data ➔ www.festo.com

Right-hand end plate, sub-base with mounting holes

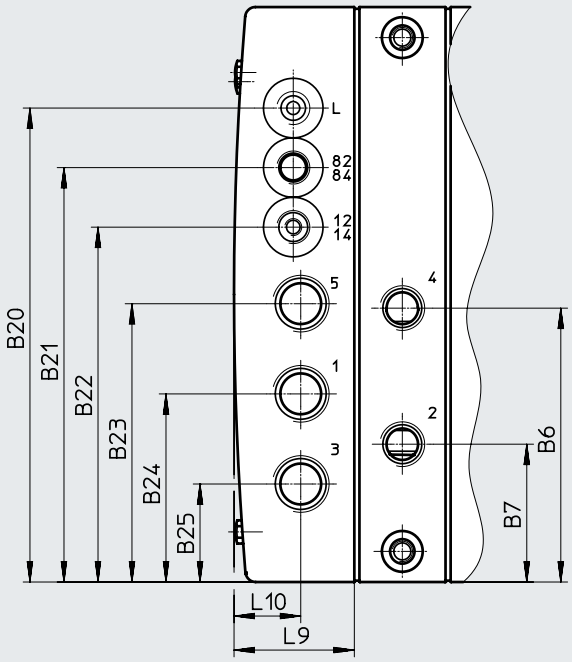

Power supply module, sub-base with additional pneumatic supply

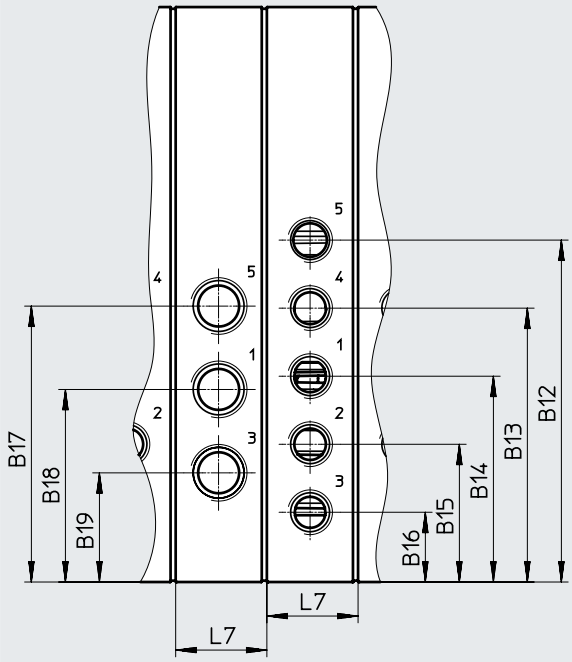

	B12	B13	B14	B15	B16	B17	B18	B19	L7
Pneumatic supply module, sub-base with additional supply	100.5	80.5	60.5	40.5	20.5	81.1	56.6	32.1	26.8

	B6	B7	B20	B21	B22	B23	B24	B25	L9	L10
Right-hand end plate	80.5	40.5	139.3	121.8	104.3	81.8	55.3	28.8	35.4	19.6

Datasheet

Dimensions Download CAD data ➔ www.festo.com

Labelling surfaces

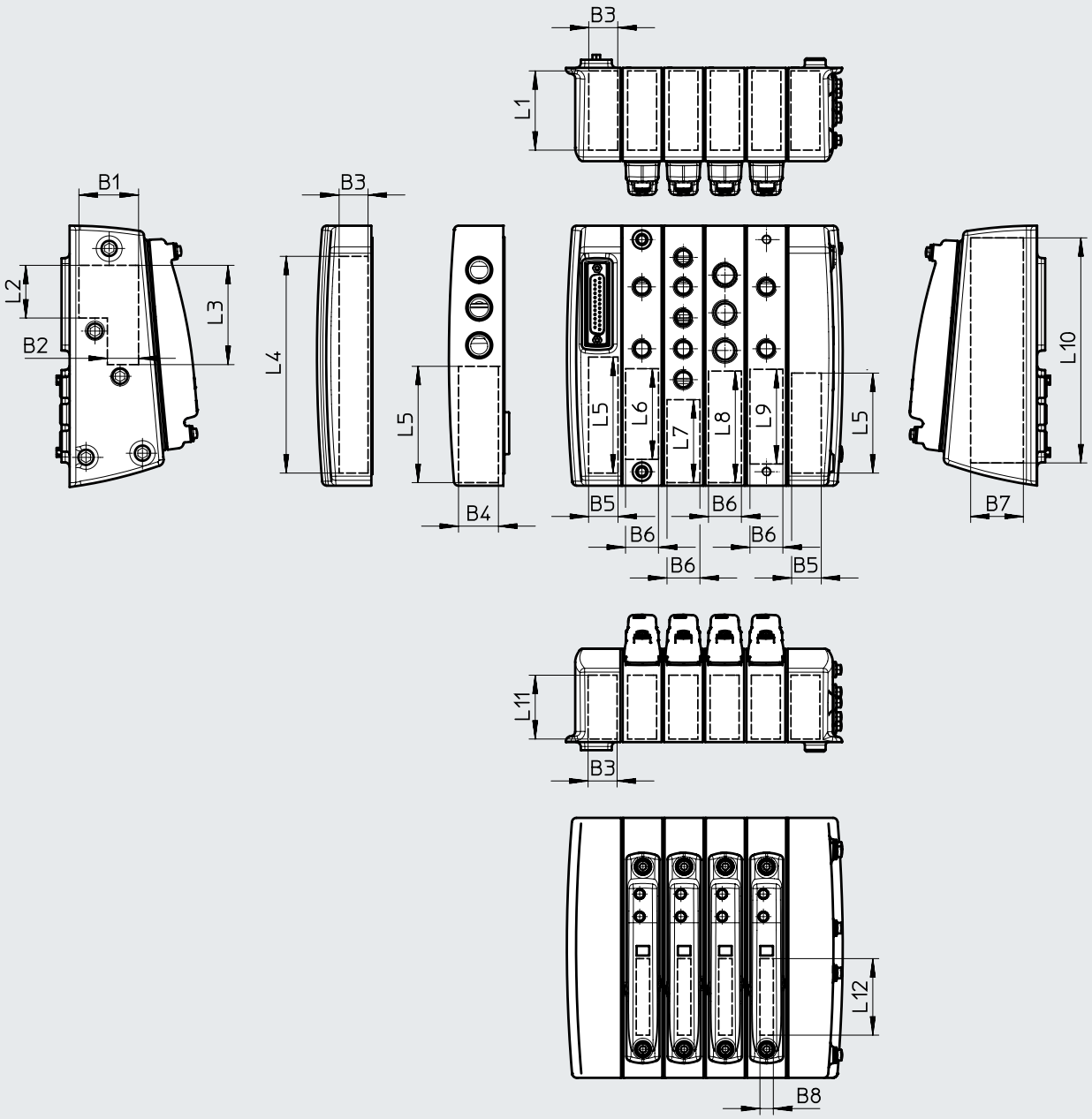

Type	B1	B2	B3	B4	B5	B6	B7	B8	L1	L2	L3	L4	L5	L6	L7	L8	L9	L10	L11	L12
MPA-C	38	20	18	25	19	21	34	8	51	34	64	140	65	58	53	72	61	146	41	49

Accessories

Ordering data	Code	Valve function		Part no.	Type
Individual solenoid valve					
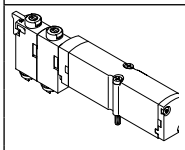	**5/2-way valve**				
	Position function 1-32: M	Single solenoid		**578806**	**VMPA14-M1HF-M-PI**
	Position function 1-32: MS	Single solenoid, mechanical spring return		**578817**	**VMPA14-M1HF-MS-PI**
	Position function 1-32: J	Double solenoid		**578805**	**VMPA14-M1HF-J-PI**
	2x 3/2-way valve				
	Position function 1-32: N	Normally open		**578813**	**VMPA14-M1HF-N-PI**
	Position function 1-32: NS	Normally open, mechanical spring return		**578819**	**VMPA14-M1HF-NS-PI**
	Position function 1-32: K	Normally closed		**578812**	**VMPA14-M1HF-K-PI**
	Position function 1-32: KS	Normally closed, mechanical spring return		**578818**	**VMPA14-M1HF-KS-PI**
	Position function 1-32: H	1x normally open, 1x normally closed		**578814**	**VMPA14-M1HF-H-PI**
	Position function 1-32: HS	1x normally open, 1x normally closed, mechanical spring return		**578821**	**VMPA14-M1HF-HS-PI**
	5/3-way valve				
	Position function 1-32: B	mid-position pressurised		**578807**	**VMPA14-M1HF-B-PI**
	Position function 1-32: G	mid-position closed		**578809**	**VMPA14-M1HF-G-PI**
	Position function 1-32: E	mid-position exhausted		**578808**	**VMPA14-M1HF-E-PI**
	3/2-way valve				
	Position function 1-32: W	Normally open, external compressed air supply		**578811**	**VMPA14-M1HF-W-PI**
	Position function 1-32: X	Normally closed, external compressed air supply		**578810**	**VMPA14-M1HF-X-PI**
	2x 2/2-way valve				
	Position function 1-32: D	Normally closed		**578815**	**VMPA14-M1HF-D-PI**
	Position function 1-32: DS	Normally closed, mechanical spring return		**578820**	**VMPA14-M1HF-DS-PI**
	Position function 1-32: I	1x normally closed, 1x normally closed, reversible only		**578816**	**VMPA14-M1HF-I-PI**
Covering					
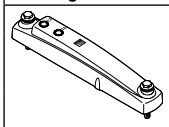	–	Cover over a valve position	Without manual override	**576588**	**VMPAC-VC-14**
			With manual override for one pilot control	**576586**	**VMPAC-VC-MO-14-1**
			With manual override for two pilot controls	**576587**	**VMPAC-VC-MO-14-2**
Cover plate					
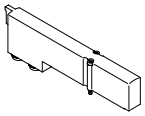	Position function 1-32: L	Blanking plate for a valve position instead of a valve; a self-adhesive label is supplied.		**573729**	**VMPA14-RP**
Check valve					
	Pneumatic connection 3: SH Pneumatic connection 5: QH	Check valve for installation in duct 3 or 5 (scope of delivery: 10 check valves, one assembly tool)		**8039820**	**VMPA14RV**

Accessories

Ordering data	Code	Description		Part no.	Type	PU[1]
Sub-base						
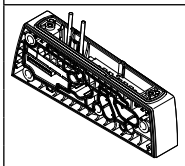	Type of module block 1 - 40: F	For 1 solenoid coil	–	**576572**	**VMPAC-AP-14-1**	1
			With mounting holes	**576574**	**VMPAC-AP-14-B-1**	1
			With additional supply	**576576**	**VMPAC-AP-14-SP-1**	1
	Type of module block 1-40: E	For 2 solenoid coils	–	**576573**	**VMPAC-AP-14-2**	1
			With mounting holes	**576575**	**VMPAC-AP-14-B-2**	1
			With additional supply	**576577**	**VMPAC-AP-14-SP-2**	1
Tie rods						
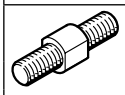	–	Threaded rod for tie rod, width across flats 5 mm The threaded rod/sleeve combination is selected based on the number and width of the individual plates (➔ page 16).	5 mm	**8025286**	**VMPAC-ZAS-5**	5
			45 mm	**8025287**	**VMPAC-ZAS-45**	5
			85 mm	**8025288**	**VMPAC-ZAS-85**	5
			125 mm	**8025289**	**VMPAC-ZAS-125**	5
			165 mm	**8025290**	**VMPAC-ZAS-165**	5
			205 mm	**8025291**	**VMPAC-ZAS-205**	5
			245 mm	**8025292**	**VMPAC-ZAS-245**	5
			285 mm	**8025293**	**VMPAC-ZAS-285**	5
			325 mm	**8025294**	**VMPAC-ZAS-325**	5
			365 mm	**8025295**	**VMPAC-ZAS-365**	5
			405 mm	**8025296**	**VMPAC-ZAS-405**	5
			445 mm	**8025297**	**VMPAC-ZAS-445**	5
			485 mm	**8025298**	**VMPAC-ZAS-485**	5
			525 mm	**8025299**	**VMPAC-ZAS-525**	5
			565 mm	**8025300**	**VMPAC-ZAS-565**	5
			605 mm	**8025301**	**VMPAC-ZAS-605**	5
			645 mm	**8025302**	**VMPAC-ZAS-645**	5
			685 mm	**8025303**	**VMPAC-ZAS-685**	5
			725 mm	**8025304**	**VMPAC-ZAS-725**	5
			765 mm	**8025305**	**VMPAC-ZAS-765**	5
			786 mm	**8032685**	**VMPAC-ZAS-786**	5
			805 mm	**8025306**	**VMPAC-ZAS-805**	5
			845 mm	**8025307**	**VMPAC-ZAS-845**	5
			866 mm	**8032686**	**VMPAC-ZAS-866**	5
			885 mm	**8025308**	**VMPAC-ZAS-885**	5
			925 mm	**8025309**	**VMPAC-ZAS-925**	5
			946 mm	**8032687**	**VMPAC-ZAS-946**	5
			965 mm	**8025310**	**VMPAC-ZAS-965**	5
			1005 mm	**8025311**	**VMPAC-ZAS-1005**	5
			1026 mm	**8032688**	**VMPAC-ZAS-1026**	5
			1045 mm	**8025312**	**VMPAC-ZAS-1045**	5
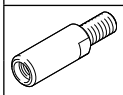	–	Tie rod extender for arranging the valve terminal with tie rod in a fixed grid (➔ page 16).	21 mm	**8038824**	**VMPAC-ZAE-20**	5
		Tie rod extender for extending the valve terminal at a later date with a sub-base or supply module	27 mm	**8025281**	**VMPAC-ZAE-14**	5
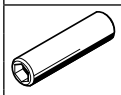	–	Sleeve, internal hex 4 mm	36 mm	**8025282**	**VMPAC-ZAH-36**	5
			46 mm	**8025283**	**VMPAC-ZAH-46**	5
			56 mm	**8025284**	**VMPAC-ZAH-56**	5
			66 mm	**8025285**	**VMPAC-ZAH-66**	5
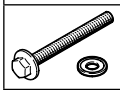	–	Screw set M4x38 mm with external hex 6 mm, with sealing washer, for tie rod	38 mm	**8025280**	**VMPAC-M4X38**	5

1) Packaging unit.

Accessories

Ordering data	Code	Description		Part no.	Type
Mounting					
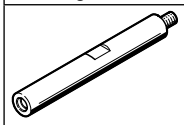	Type of mounting: Y	Spacer bolts for mounting the valve terminal	4 piece	**576585**	**VMPAC-BA**
Separator					
	–	For pressure zone separation	3 piece	**576578**	**VMPAC-TE-1-3-5**
Power supply module					
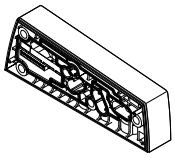	Type of module block 1-40: U	With electrical interlinking module		**576569**	**VMPAC-SP-0**
Right-hand end plate					
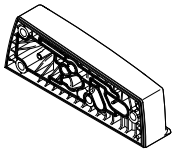	Pilot air: Z	With internal pilot air supply		**576563**	**VMPAC-EPR-IN**
	Pilot air: –	With external pilot air supply		**576564**	**VMPAC-EPR-EX**
Left-hand end plate					
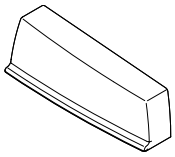	Electrical connection: MS1	Electrical connection underneath	Sub-D, 25-pin, 24 addresses	**576557**	**VMPAC-EPL-MP-SD25**
	Electrical connection: MS3		Sub-D, 44-pin, 32 addresses	**576559**	**VMPAC-EPL-MP-SD44**
	Electrical connection: PT		Node with I-Port interface 32 addresses	**576561**	**VMPAC-EPL-IP**
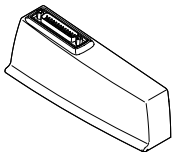	Electrical connection: MS1	Electrical connection on top	Sub-D, 25-pin, 24 addresses	**576558**	**VMPAC-EPL-MP-SD25-O**
	Electrical connection: MS3		Sub-D, 44-pin, 32 addresses	**576560**	**VMPAC-EPL-MP-SD44-O**
	Electrical connection: PT		Node with I-Port interface 32 addresses	**576562**	**VMPAC-EPL-IP-O**
Connecting cable for I-Port interface/IO-Link®					
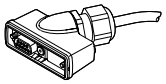	Connecting cable: FH	9-pin socket, Sub-D, open cable end 5-wire	2.5 m	**2376018**	**NEBC-C-S1WA9HS-K-2.5-N-B-LE5-PT-S10**
	Connecting cable: FI		5 m	**2376019**	**NEBC-C-S1WA9HS-K-5-N-B-LE5-PT-S10**
	Connecting cable: FJ		10 m	**2376020**	**NEBC-C-S1WA9HS-K-10-N-B-LE5-PT-S10**
	–		X length[1]	**4106124**	**NEBC-C-S1WA9HS-K-...-N-B-LE5-PT-S10**
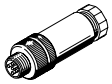	–	Plug M12x1, 5-pin, straight, for connecting cable NEBC-C-S1WA9...		**175380**	**FBS-M12-5GS-PG9**
Connecting cable for multi-pin plug connection					
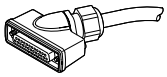	Connecting cable: FA	25-pin socket, Sub-D, open cable end 25-wire	2.5 m	**2265131**	**NEBV-C-S1WA25HS-K-2.5-N-LE25-S10**
	Connecting cable: FB		5 m	**2265132**	**NEBV-C-S1WA25HS-K-5-N-LE25-S10**
	Connecting cable: FC		10 m	**2265133**	**NEBV-C-S1WA25HS-K-10-N-LE25-S10**
	Connecting cable: FD	44-pin socket, Sub-D HD, open cable end 36-wire	2.5 m	**577376**	**NEBV-C-S7WA44HS-K-2.5-N-LE36-S10**
	Connecting cable: FE		5 m	**577377**	**NEBV-C-S7WA44HS-K-5-N-LE36-S10**
	Connecting cable: FG		10 m	**577378**	**NEBV-C-S7WA44HS-K-10-N-LE36-S10**

1) Cable length 0.5 ... 20 m.

Accessories

Ordering data	Code	Information on housing materials	Connecting thread	For tubing O.D. [mm]	Part no.	Type	PU[1]
Push-in fitting, straight							
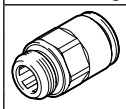	Type of push-in fitting: NPQH	Nickel-plated brass	G1/8	4	**578338**	**NPQH-D-G18-Q4-P10**	10
				6	**578339**	**NPQH-D-G18-Q6-P10**	10
				8	**578340**	**NPQH-D-G18-Q8-P10**	10
			G1/4	6	**578341**	**NPQH-D-G14-Q6-P10**	10
				8	**578342**	**NPQH-D-G14-Q8-P10**	10
				10	**578343**	**NPQH-D-G14-Q10-P10**	10
				12	**578344**	**NPQH-D-G14-Q12-P10**	10
			G3/8	8	**578345**	**NPQH-D-G38-Q8-P10**	10
				10	**578346**	**NPQH-D-G38-Q10-P10**	10
				12	**578347**	**NPQH-D-G38-Q12-P10**	10
				14	**578348**	**NPQH-D-G38-Q14-P10**	10
	Type of push-in fitting: NPCK	High-alloy stainless steel	G1/8	6	**1366257**	**NPCK-C-D-G18-K6**	1
				8	**1490383**	**NPCK-C-D-G18-K8**	1
			G1/4	8	**1691701**	**NPCK-C-D-G14-K8**	1
				10	**1489336**	**NPCK-C-D-G14-K10**	1
			G3/8	10	**1489614**	**NPCK-C-D-G38-K10**	1
	Type of push-in fitting: QS	PBT	G1/8	4	**186095**	**QS-G1/8-4**	10
				6	**186096**	**QS-G1/8-6**	10
				8	**186098**	**QS-G1/8-8**	10
			G1/4	6	**186097**	**QS-G1/4-6**	10
				8	**186099**	**QS-G1/4-8**	10
				10	**186101**	**QS-G1/4-10**	10
				12	**186350**	**QS-G1/4-12**	10
			G3/8	8	**186100**	**QS-G3/8-8**	10
				10	**186102**	**QS-G3/8-10**	10
				12	**186103**	**QS-G3/8-12**	10
				16	**186347**	**QS-G3/8-16**	1
Push-in L-fitting							
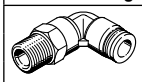	Type of push-in fitting: NPQH	Nickel-plated brass	G1/8	4	**578280**	**NPQH-L-G18-Q4-P10**	10
				6	**578281**	**NPQH-L-G18-Q6-P10**	10
				8	**578282**	**NPQH-L-G18-Q8-P10**	10
			G1/4	6	**578283**	**NPQH-L-G14-Q6-P10**	10
				8	**578284**	**NPQH-L-G14-Q8-P10**	10
				10	**578285**	**NPQH-L-G14-Q10-P10**	10
				12	**578286**	**NPQH-L-G14-Q12-P10**	10
			G3/8	8	**578287**	**NPQH-L-G38-Q8-P10**	10
				10	**578288**	**NPQH-L-G38-Q10-P10**	10
				12	**578289**	**NPQH-L-G38-Q12-P10**	10
				14	**578290**	**NPQH-L-G38-Q14-P10**	10
	Type of push-in fitting: QS	PBT	G1/8	4	**186116**	**QSL-G1/8-4**	10
				6	**186117**	**QSL-G1/8-6**	10
				8	**186119**	**QSL-G1/8-8**	10
			G1/4	6	**186118**	**QSL-G1/4-6**	10
				8	**186120**	**QSL-G1/4-8**	10
				10	**186122**	**QSL-G1/4-10**	10
				12	**186351**	**QSL-G1/4-12**	10
			G3/8	8	**186121**	**QSL-G3/8-8**	10
				10	**186123**	**QSL-G3/8-10**	10
				12	**186124**	**QSL-G3/8-12**	10

1) Packaging unit.

Accessories

Ordering data	Code	Information on housing materials	Connecting thread	For tubing O.D. [mm]	Part no.	Type	PU[1]
Push-in L-fitting, long							
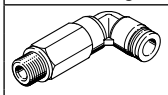	Type of push-in fitting: NPQH	Nickel-plated brass	G1/8	4	**578263**	**NPQH-LL-G18-Q4-P10**	10
				6	**578264**	**NPQH-LL-G18-Q6-P10**	10
				8	**578265**	**NPQH-LL-G18-Q8-P10**	10
			G1/4	6	**578266**	**NPQH-LL-G14-Q6-P10**	10
				8	**578267**	**NPQH-LL-G14-Q8-P10**	10
				10	**578268**	**NPQH-LL-G14-Q10-P10**	10
			G3/8	10	**578269**	**NPQH-LL-G38-Q10-P10**	10
	Type of push-in fitting: QS	PBT	G1/8	4	**186127**	**QSLL-G1/8-4**	10
				6	**186128**	**QSLL-G1/8-6**	10
				8	**186130**	**QSLL-G1/8-8**	10
			G1/4	6	**186129**	**QSLL-G1/4-6**	10
				8	**186131**	**QSLL-G1/4-8**	10
				10	**186133**	**QSLL-G1/4-10**	10
				12	**132596**	**QSLL-G1/4-12**	10
			G3/8	8	**186132**	**QSLL-G3/8-8**	10
				10	**186134**	**QSLL-G3/8-10**	10
				12	**186135**	**QSLL-G3/8-12**	10

1) Packaging unit.

Ordering data	Code	Description		Part no.	Type	PU[1]
Silencer						
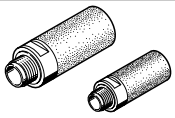	–	Connecting thread	G1/8	**161419**	**UC-1/8**	1
			G1/4	**165004**	**UC-1/4**	1
			G3/8	**1707427**	**UC-3/8**	1
				576759	**UC-3/8-20**	20
Blanking plug						
	–	Thread, external hex	G1/8	**196720**	**CDVI5.0-B-G1/8**	1
			G1/4	**8035644**	**CDVI5.0-B-G1/4**	1
			G3/8	**196712**	**CDVI5.0-B-G3/8**	1
User documentation						
	Documentation: DE	MPA-C pneumatics	German	**8023739**	**MPAC-VI-DE**	
	Documentation: EN		English	**8023740**	**MPAC-VI-EN**	
	Documentation: FR		French	**8023742**	**GDCV-MPAC-FR**	
	Documentation: ES		Spanish	**8023741**	**GDCV-MPAC-ES**	
	Documentation: IT		Italian	**8023744**	**GDCV-MPAC-IT**	
	Documentation: ZH		Chinese	**8023745**	**GDCV-MPAC-ZH**	

1) Packaging unit.