Service unit FRC, FRCS

Characteristics

At a glance

Filter, regulator and lubricator functions in a single unit.
- High flow rate and extremely efficient in removing contaminants
- Setting values are secured by locking the rotary knob
- Lockable rotary knob (FRCS, optional for FRC)
- Two pressure gauge connections for variable installation

The following oils are recommended for Festo components (viscosity range to ISO 3448, ISO class VG 32, 32 mm2/s (= cSt) at 40 °C):
- Festo special oil OFSW-32 (see accessories)
- ARAL Vitam GF 32
- BP Energol HLP 32
- ESSO Nuto H 32
- Mobil DTE 24
- Shell Tellus Oil DO 32

Diagrams

The diagrams shown in this document are also available online. These can be used to display precise values.

Version

[D]	D series, metal

Sturdy in full metal design for the specific requirements of the process automation industry

Pressure regulation range

Two pressure regulation ranges: 0.5...7 bar and 0.5...12 bar

Grade of filtration

Grade of filtration of 5 µm or 40 µm can be selected.

Pressure gauge

The filter regulator can be ordered with or without a pressure gauge. The interface has a thread of G1/4 or G1/8.

Condensate drain

The following functions can be selected:
- Manual
- Fully automatic, normally closed

Type code

001	Series	
FRC	Service unit	
FRCS	Service unit, lockable	

002	Pneumatic connection	
1/8	Female thread G1/8	
1/4	Female thread G1/4	
3/8	Female thread G3/8	
1/2	Female thread G1/2	
3/4	Female thread G3/4	
1	Female thread G1	

003	Version	
D	D series, metal	

004	Pressure regulation range	
	0.5 ... 12 bar (0.05 ... 1.2 MPa)	
7	0.5 ... 7 bar (0.05 ... 0.7 MPa)	

005	Grade of filtration	
	40 µm	
5M	5 µm	

006	Pressure gauge	
	With pressure gauge	
O	Without pressure gauge	

007	Size	
MINI	Grid dimension 40 mm (without connecting plates)	
MIDI	Grid dimension 55 mm (without connecting plates)	
MAXI	Grid dimension 66 mm (without connecting plates)	

008	Condensate drain	
	Manually rotating	
A	Fully automatic	

Datasheet

Technical data – Mini		
Size	Mini	
Grade of filtration	5 µm	40 µm
Pneumatic connection, port 1	G1/8, G1/4, G3/8	
Pneumatic connection, port 2	G1/8, G1/4, G3/8	
Type of mounting	In-line installation With accessories	
Mounting position	Vertical +/-5°	
Air purity class at output	Compressed air to ISO 8573-1:2010 [6:8:-] Inert gases	Compressed air to ISO 8573-1:2010 [7:8:-] Inert gases
Bowl guard	Metal bowl guard	
Condensate drain	Fully automatic Manually rotating	
Actuator lock	Rotary knob with detent	Rotary knob with detent, Rotary knob with integrated lock
Pressure regulation range	0.5 ... 12 bar	
Max. pressure hysteresis	0.2 bar	
Pressure gauge (ANALOG) or Pressure display (DIGITAL)	Prepared for G1/8, With pressure gauge	
Max. condensate volume	22 cm³	
Operating pressure [1]	1 ... 16 bar	
Operating medium [2]	Compressed air to ISO 8573-1:2010 [-:9:-] Compressed air to ISO 8573-1:2010 [7:9:-] Inert gases	
Ambient temperature	-10 ... 60°C	
Media temperature	-10 ... 60°C	

1) For fully automatic condensate drain: 2 ... 12 bar

2) For fully automatic condensate drain: compressed air to ISO 8573-1:2010 [7:9:-]

Technical data – Midi		
Size	Midi	
Grade of filtration	5 µm	40 µm
Pneumatic connection, port 2	G1/4, G3/8, G1/2, G3/4	
Type of mounting	In-line installation With accessories	
Mounting position	Vertical +/-5°	
Air purity class at output	Compressed air to ISO 8573-1:2010 [6:8:-] Inert gases	Compressed air to ISO 8573-1:2010 [7:8:-] Inert gases
Bowl guard	Metal bowl guard	
Condensate drain	Fully automatic Manually rotating	
Actuator lock	Rotary knob with detent	Rotary knob with detent, Rotary knob with integrated lock
Pressure regulation range	0.5 ... 12 bar	
Max. pressure hysteresis	0.2 bar	
Pressure gauge (ANALOG) or Pressure display (DIGITAL)	Prepared for G1/4, With pressure gauge	
Max. condensate volume	43 cm³	
Operating pressure [1]	1 ... 16 bar	
Operating medium [2]	Compressed air to ISO 8573-1:2010 [-:9:-] Compressed air to ISO 8573-1:2010 [7:9:-] Inert gases	
Ambient temperature	-10 ... 60°C	
Media temperature	-10 ... 60°C	

1) For fully automatic condensate drain: 2 ... 12 bar

2) For fully automatic condensate drain: compressed air to ISO 8573-1:2010 [7:9:-]

Datasheet

Technical data – Maxi

Size	Maxi	
Grade of filtration	5 µm	40 µm
Pneumatic connection, port 1	G1/2, G3/4, G1	
Pneumatic connection, port 2	G1/2, G3/4, G1	
Type of mounting	In-line installation With accessories	
Mounting position	Vertical +/-5°	
Air purity class at output	Compressed air to ISO 8573-1:2010 [6:8:-] Inert gases	Compressed air to ISO 8573-1:2010 [7:8:-] Inert gases
Bowl guard	Metal bowl guard	
Condensate drain	Fully automatic Manually rotating	
Actuator lock	Rotary knob with detent	Rotary knob with detent, Rotary knob with integrated lock
Pressure regulation range	0.5 ... 12 bar	
Max. pressure hysteresis	0.4 bar	
Pressure gauge (ANALOG) or Pressure display (DIGITAL)	Prepared for G1/4, With pressure gauge	
Max. condensate volume	80 cm³	
Operating pressure [1]	1 ... 16 bar	
Operating medium [2]	Compressed air to ISO 8573-1:2010 [-:9:-] Compressed air to ISO 8573-1:2010 [7:9:-] Inert gases	Compressed air to ISO 8573-1:2010 [-:9:-] Compressed air to ISO 8573-1:2010 [7:9:-] Inert gases Compressed air to ISO 8573-1:2010 [-:-:-]
Ambient temperature	-10 ... 60°C	
Media temperature	-10 ... 60°C	

1) For fully automatic condensate drain: 2 ... 12 bar

2) For fully automatic condensate drain: compressed air to ISO 8573-1:2010 [7:9:-]

Function (manual condensate drain, rotating, with pressure gauge)

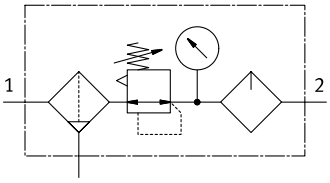

Function (fully automatic condensate drain, with pressure gauge)

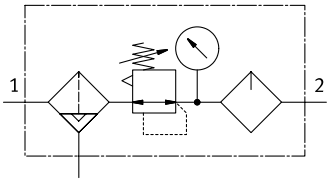

Datasheet

Standard flow rate qn as a function of output pressure p2 (FRC/FRCS-1/4-D-MINI)

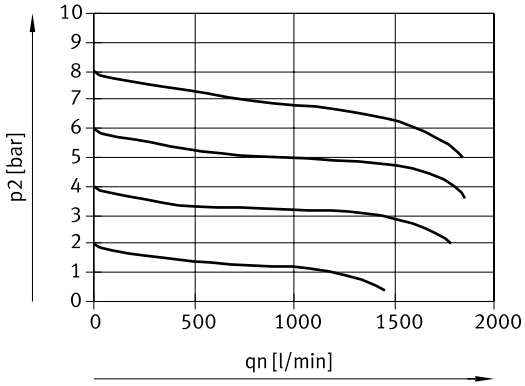

Input pressure p1 = 10 bar

Standard flow rate qn as a function of output pressure p2 (FRC/FRCS-1/2-D-MIDI)

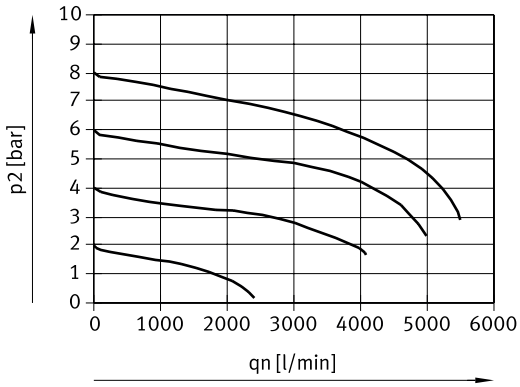

Input pressure p1 = 10 bar

Standard flow rate qn as a function of output pressure p2 (FRC-1-D-MAXI)

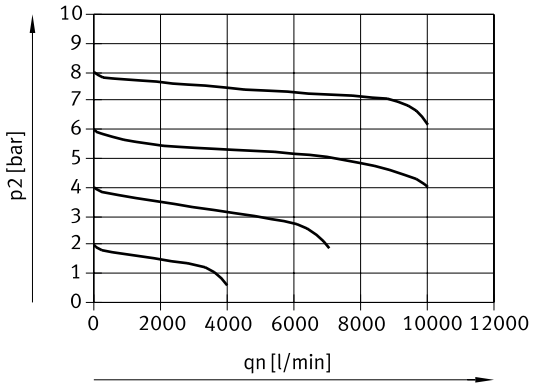

Input pressure p1 = 10 bar

Dimensions

Download CAD data www.festo.com

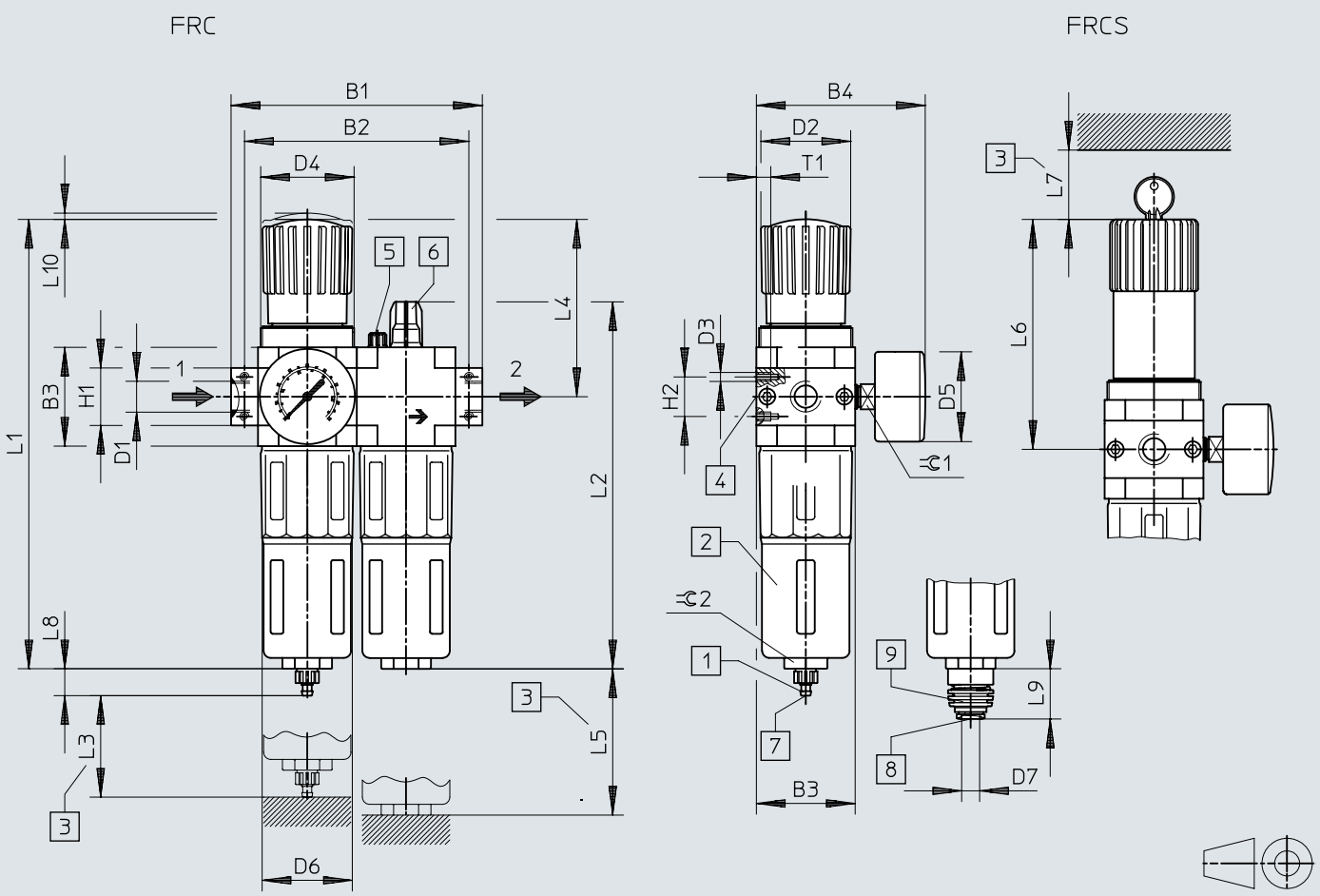

[1] Barbed connector for plastic tubing PUN(-H)-8x1.25
[2] Metal bowl guard
[3] Installation dimension
[4] Second pressure gauge connection
[5] Vent screw for oil reservoir
[6] Oil adjusting screw
[7] Manual condensate drain
[8] Fully automatic condensate drain

Dimensions

	B1	B2	B3	B4	D1	D2 ⌀	D3	D4	D5 ⌀	D6 ⌀
FRC-1/8-D-MINI	104	92	40	76	G1/8	31	M4	M36x1,5	39	38
FRC/FRCS-1/4-D-MINI					G1/4					
FRC-3/8-D-MINI	110				G3/8					
FRC/FRCS-1/4-D-MIDI	140	125	55	95	G1/4	50	M5	M52x1,5	39	52
FRC-3/8-D-MIDI					G3/8					
FRC/FRCS-1/2-D-MIDI					G1/2					
FRC-3/4-D-MIDI					G3/4					
FRC/FRCS-1/2-D-MAXI	162	146	66	106	G1/2	31	M5	M36x1,5	39	65
FRC-3/4-D-MAXI					G3/4					
FRC-1-D-MAXI	182	157			G1					

	H1	H2	L1	L2	L3	L4	L5	L6	L7	L8	L9	L10	T1	⌀ 1	⌀ 2
FRC-1/8-D-MINI	20	11	193	169	60	69	100	98	60	15	19	3	7	14	22
FRC/FRCS-1/4-D-MINI															
FRC-3/8-D-MINI															
FRC/FRCS-1/4-D-MIDI	32	22	250	204	80	99	120	130	60	15	19	3	8	14	24
FRC-3/8-D-MIDI															
FRC/FRCS-1/2-D-MIDI															
FRC-3/4-D-MIDI															
FRC/FRCS-1/2-D-MAXI	32	22	252	228	90	82	150	111	60	15	19	3	8	14	24
FRC-3/4-D-MAXI	32														
FRC-1-D-MAXI	40														

Ordering data

Ordering information – Mini

Pneumatic connection, port 1	Standard nominal flow rate (standardised to DIN 1343)	Condensate drain	Pressure gauge	Product weight	Part no.	Type
G1/8	600 l/min	Fully automatic	With pressure gauge	660 g	**162778**	**FRC-1/8-D-5M-MINI-A**
			Without pressure gauge		**192660**	**FRC-1/8-D-5M-O-MINI-A**
		Manually rotating	With pressure gauge		**162770**	**FRC-1/8-D-5M-MINI**
			Without pressure gauge		**192650**	**FRC-1/8-D-5M-O-MINI**
	700 l/min	Fully automatic	With pressure gauge		**159608**	**FRC-1/8-D-MINI-A**
			Without pressure gauge	600 g	**162746**	**FRC-1/8-D-O-MINI-A**
		Manually rotating	With pressure gauge	660 g	**159604**	**FRC-1/8-D-MINI**
			Without pressure gauge	600 g	**162738**	**FRC-1/8-D-O-MINI**
	800 l/min	Fully automatic	With pressure gauge	660 g	**162762**	**FRC-1/8-D-7-MINI-A**
			Without pressure gauge		**192640**	**FRC-1/8-D-7-O-MINI-A**
		Manually rotating	With pressure gauge		**162754**	**FRC-1/8-D-7-MINI**
			Without pressure gauge		**192630**	**FRC-1/8-D-7-O-MINI**
G1/4	850 l/min	Fully automatic	With pressure gauge		**162779**	**FRC-1/4-D-5M-MINI-A**
			Without pressure gauge		**192661**	**FRC-1/4-D-5M-O-MINI-A**
		Manually rotating	With pressure gauge		**162771**	**FRC-1/4-D-5M-MINI**
			Without pressure gauge		**192651**	**FRC-1/4-D-5M-O-MINI**
	1,000 l/min	Fully automatic	With pressure gauge		**159609**	**FRC-1/4-D-MINI-A**
			Without pressure gauge	600 g	**162747**	**FRC-1/4-D-O-MINI-A**
		Manually rotating	With pressure gauge	660 g	**159605**	**FRC-1/4-D-MINI**
				760 g	**194864**	**FRCS-1/4-D-MINI**
			Without pressure gauge	600 g	**162739**	**FRC-1/4-D-O-MINI**
	1,300 l/min	Fully automatic	With pressure gauge	660 g	**162763**	**FRC-1/4-D-7-MINI-A**
			Without pressure gauge		**192641**	**FRC-1/4-D-7-O-MINI-A**
		Manually rotating	With pressure gauge		**162755**	**FRC-1/4-D-7-MINI**
			Without pressure gauge		**192631**	**FRC-1/4-D-7-O-MINI**
G3/8	1,050 l/min	Fully automatic	With pressure gauge		**162780**	**FRC-3/8-D-5M-MINI-A**
			Without pressure gauge		**192662**	**FRC-3/8-D-5M-O-MINI-A**
		Manually rotating	With pressure gauge		**162772**	**FRC-3/8-D-5M-MINI**
			Without pressure gauge		**192652**	**FRC-3/8-D-5M-O-MINI**
	1,200 l/min	Fully automatic	With pressure gauge		**162736**	**FRC-3/8-D-MINI-A**
			Without pressure gauge	600 g	**162748**	**FRC-3/8-D-O-MINI-A**
		Manually rotating	With pressure gauge	660 g	**162734**	**FRC-3/8-D-MINI**
			Without pressure gauge	600 g	**162740**	**FRC-3/8-D-O-MINI**
	1,500 l/min	Fully automatic	With pressure gauge	660 g	**162764**	**FRC-3/8-D-7-MINI-A**
			Without pressure gauge		**192642**	**FRC-3/8-D-7-O-MINI-A**
		Manually rotating	With pressure gauge		**162756**	**FRC-3/8-D-7-MINI**
			Without pressure gauge		**192632**	**FRC-3/8-D-7-O-MINI**

Ordering data

Ordering information – Midi

Pneumatic connection, port 1	Standard nominal flow rate (standardised to DIN 1343)	Condensate drain	Pressure gauge	Product weight	Part no.	Type
G1/4	1,300 l/min	Fully automatic	With pressure gauge	1,440 g	186502	FRC-1/4-D-5M-MIDI-A
			Without pressure gauge		192663	FRC-1/4-D-5M-O-MIDI-A
		Manually rotating	With pressure gauge		186499	FRC-1/4-D-5M-MIDI
			Without pressure gauge		192653	FRC-1/4-D-5M-O-MIDI
	1,500 l/min	Fully automatic	With pressure gauge		186500	FRC-1/4-D-MIDI-A
			Without pressure gauge	1,350 g	186501	FRC-1/4-D-O-MIDI-A
		Manually rotating	With pressure gauge	1,440 g	186497	FRC-1/4-D-MIDI
				1,680 g	194888	FRCS-1/4-D-MIDI
			Without pressure gauge	1,350 g	186498	FRC-1/4-D-O-MIDI
	1,700 l/min	Fully automatic	With pressure gauge	1,440 g	186504	FRC-1/4-D-7-MIDI-A
			Without pressure gauge		192643	FRC-1/4-D-7-O-MIDI-A
		Manually rotating	With pressure gauge		186503	FRC-1/4-D-7-MIDI
			Without pressure gauge		192633	FRC-1/4-D-7-O-MIDI
G3/8		Fully automatic	With pressure gauge		162781	FRC-3/8-D-5M-MIDI-A
			Without pressure gauge		192664	FRC-3/8-D-5M-O-MIDI-A
		Manually rotating	With pressure gauge		162773	FRC-3/8-D-5M-MIDI
			Without pressure gauge		192654	FRC-3/8-D-5M-O-MIDI
	2,000 l/min	Fully automatic	With pressure gauge		162765	FRC-3/8-D-7-MIDI-A
					159589	FRC-3/8-D-MIDI-A
			Without pressure gauge		192644	FRC-3/8-D-7-O-MIDI-A
		Manually rotating	With pressure gauge		162757	FRC-3/8-D-7-MIDI
					159588	FRC-3/8-D-MIDI
			Without pressure gauge	1,350 g	162741	FRC-3/8-D-O-MIDI
				1,440 g	192634	FRC-3/8-D-7-O-MIDI
G1/2	1,800 l/min	Fully automatic	With pressure gauge		162782	FRC-1/2-D-5M-MIDI-A
			Without pressure gauge		192665	FRC-1/2-D-5M-O-MIDI-A
		Manually rotating	With pressure gauge		162774	FRC-1/2-D-5M-MIDI
			Without pressure gauge		192655	FRC-1/2-D-5M-O-MIDI
	2,600 l/min	Fully automatic	With pressure gauge		159591	FRC-1/2-D-MIDI-A
				1,680 g	194913	FRCS-1/2-D-MIDI-A
			Without pressure gauge	1,350 g	162750	FRC-1/2-D-O-MIDI-A
		Manually rotating	With pressure gauge	1,440 g	159590	FRC-1/2-D-MIDI
				1,680 g	194912	FRCS-1/2-D-MIDI
			Without pressure gauge	1,350 g	162742	FRC-1/2-D-O-MIDI
	2,800 l/min	Fully automatic	With pressure gauge	1,440 g	162766	FRC-1/2-D-7-MIDI-A
			Without pressure gauge		192645	FRC-1/2-D-7-O-MIDI-A
		Manually rotating	With pressure gauge		162758	FRC-1/2-D-7-MIDI
			Without pressure gauge		192635	FRC-1/2-D-7-O-MIDI
G3/4	2,100 l/min	Fully automatic	With pressure gauge		162783	FRC-3/4-D-5M-MIDI-A
			Without pressure gauge		192666	FRC-3/4-D-5M-O-MIDI-A
		Manually rotating	With pressure gauge		162775	FRC-3/4-D-5M-MIDI
			Without pressure gauge		192656	FRC-3/4-D-5M-O-MIDI
	2,600 l/min	Fully automatic	With pressure gauge		162737	FRC-3/4-D-MIDI-A

Ordering data

Ordering information – Midi

Pneumatic connection, port 1	Standard nominal flow rate (standardised to DIN 1343)	Condensate drain	Pressure gauge	Product weight	Part no.	Type
G3/4	2,600 l/min	Fully automatic	Without pressure gauge	1,350 g	**162751**	**FRC-3/4-D-O-MIDI-A**
					162749	**FRC-3/8-D-O-MIDI-A**
		Manually rotating	With pressure gauge	1,440 g	**162735**	**FRC-3/4-D-MIDI**
			Without pressure gauge	1,350 g	**162743**	**FRC-3/4-D-O-MIDI**
	2,800 l/min	Fully automatic	With pressure gauge	1,440 g	**162767**	**FRC-3/4-D-7-MIDI-A**
			Without pressure gauge		**192646**	**FRC-3/4-D-7-O-MIDI-A**
		Manually rotating	With pressure gauge		**162759**	**FRC-3/4-D-7-MIDI**
			Without pressure gauge		**192636**	**FRC-3/4-D-7-O-MIDI**

Ordering data – Maxi

Pneumatic connection, port 1	Standard nominal flow rate (standardised to DIN 1343)	Condensate drain	Pressure gauge	Product weight	Part no.	Type
G1/2	6,800 l/min	Fully automatic	With pressure gauge	2,390 g	**186510**	**FRC-1/2-D-5M-MAXI-A**
			Without pressure gauge		**192667**	**FRC-1/2-D-5M-O-MAXI-A**
		Manually rotating	With pressure gauge		**186507**	**FRC-1/2-D-5M-MAXI**
			Without pressure gauge		**192657**	**FRC-1/2-D-5M-O-MAXI**
	7,600 l/min	Fully automatic	With pressure gauge		**186508**	**FRC-1/2-D-MAXI-A**
				2,490 g	**194937**	**FRCS-1/2-D-MAXI-A**
			Without pressure gauge	2,280 g	**186509**	**FRC-1/2-D-O-MAXI-A**
		Manually rotating	With pressure gauge	2,390 g	**186505**	**FRC-1/2-D-MAXI**
			Without pressure gauge	2,280 g	**186506**	**FRC-1/2-D-O-MAXI**
	7,700 l/min	Fully automatic	With pressure gauge	2,390 g	**186512**	**FRC-1/2-D-7-MAXI-A**
			Without pressure gauge		**192647**	**FRC-1/2-D-7-O-MAXI-A**
		Manually rotating	With pressure gauge		**186511**	**FRC-1/2-D-7-MAXI**
			Without pressure gauge		**192637**	**FRC-1/2-D-7-O-MAXI**
G3/4	7,000 l/min	Fully automatic	With pressure gauge		**162784**	**FRC-3/4-D-5M-MAXI-A**
			Without pressure gauge		**192668**	**FRC-3/4-D-5M-O-MAXI-A**
		Manually rotating	With pressure gauge		**162776**	**FRC-3/4-D-5M-MAXI**
			Without pressure gauge		**192658**	**FRC-3/4-D-5M-O-MAXI**
	8,300 l/min	Fully automatic	With pressure gauge		**159610**	**FRC-3/4-D-MAXI-A**
			Without pressure gauge	2,280 g	**162752**	**FRC-3/4-D-O-MAXI-A**
		Manually rotating	With pressure gauge	2,390 g	**159606**	**FRC-3/4-D-MAXI**
			Without pressure gauge	2,280 g	**162744**	**FRC-3/4-D-O-MAXI**
	8,500 l/min	Fully automatic	With pressure gauge	2,390 g	**162768**	**FRC-3/4-D-7-MAXI-A**
			Without pressure gauge		**192648**	**FRC-3/4-D-7-O-MAXI-A**
		Manually rotating	With pressure gauge		**162760**	**FRC-3/4-D-7-MAXI**
			Without pressure gauge		**192638**	**FRC-3/4-D-7-O-MAXI**
G1	7,200 l/min	Fully automatic	With pressure gauge	2,520 g	**162785**	**FRC-1-D-5M-MAXI-A**
			Without pressure gauge		**192669**	**FRC-1-D-5M-O-MAXI-A**
		Manually rotating	With pressure gauge		**162777**	**FRC-1-D-5M-MAXI**
			Without pressure gauge		**192659**	**FRC-1-D-5M-O-MAXI**
	8,500 l/min	Fully automatic	With pressure gauge		**159611**	**FRC-1-D-MAXI-A**

Ordering data

Ordering data – Maxi						
Pneumatic connection, port 1	Standard nominal flow rate (standardised to DIN 1343)	Condensate drain	Pressure gauge	Product weight	Part no.	Type
G1	8,500 l/min	Fully automatic	Without pressure gauge	2,460 g	**162753**	**FRC-1-D-O-MAXI-A**
		Manually rotating	With pressure gauge	2,520 g	**159607**	**FRC-1-D-MAXI**
			Without pressure gauge	2,460 g	**162745**	**FRC-1-D-O-MAXI**
	8,700 l/min	Fully automatic	With pressure gauge	2,520 g	**162769**	**FRC-1-D-7-MAXI-A**
			Without pressure gauge		**192649**	**FRC-1-D-7-O-MAXI-A**
		Manually rotating	With pressure gauge		**162761**	**FRC-1-D-7-MAXI**

Peripherals

Service unit FRC

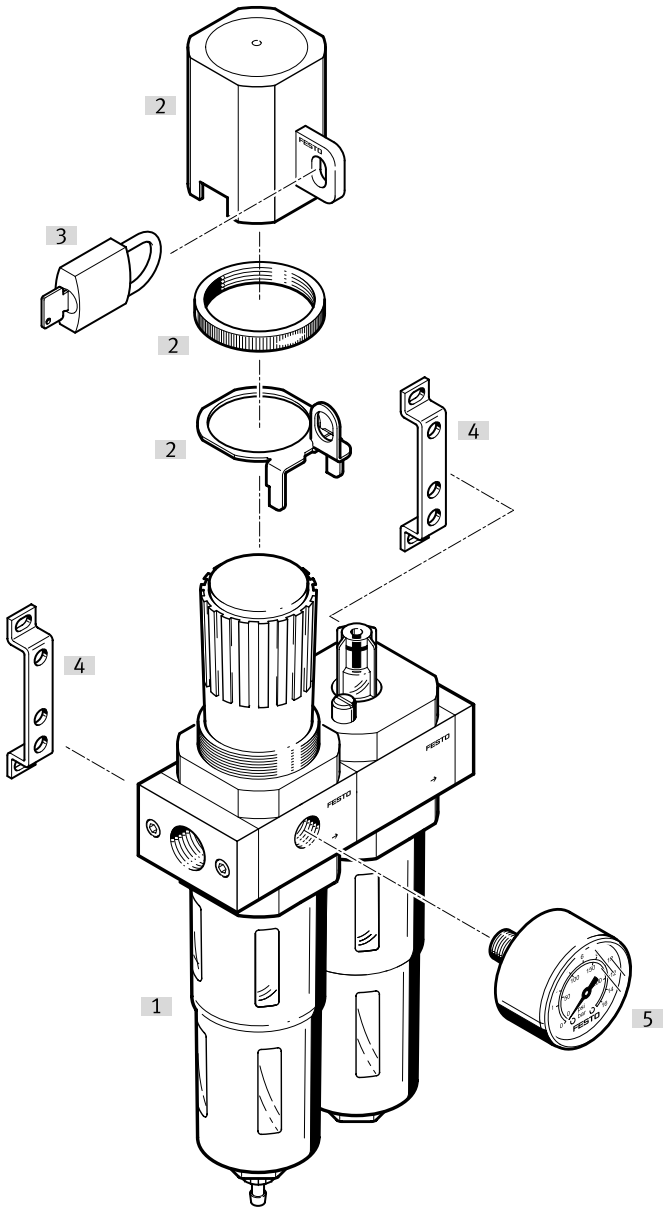

Accessories			→ Link
	Type/order code	Description	
[1]	Service unit FRC		frc-d
[2]	Regulator lock LRVS		15
[3]	Padlock LRVS-D		15
[4]	Mounting bracket HFOE		15
[5]	Pressure gauge MA		15

Peripherals

Service unit FRCS (lockable)

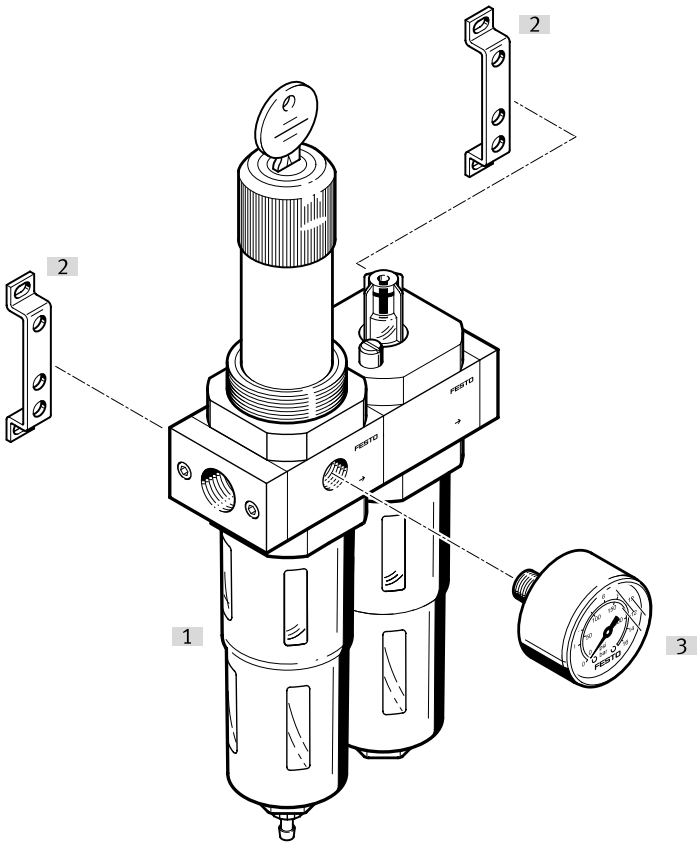

Accessories			→ Link
	Type/order code	Description	
[1]	Service unit FRC		frc-d
[2]	Mounting bracket HFOE		15
[3]	Pressure gauge MA		15

Accessories

Mounting bracket HFOE-D-MIDI/MAXI

	Short type code	Corrosion resistance class CRC [1]	Part no.	Type
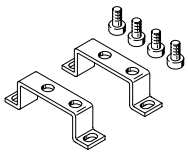	HFOE	2 - Moderate corrosion stress	**159593**	**HFOE-D-MIDI/MAXI**

1) More information: www.festo.com/x/topic/crc

Filter cartridges, D series, metal

	Size	Grade of filtration [1]	Part no.	Type
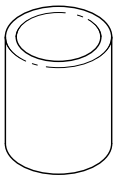	Maxi	5 µm	**159641**	**LFP-D-MAXI-5M**
	Midi		**159594**	**LFP-D-MIDI-5M**
	Mini		**159640**	**LFP-D-MINI-5M**

1) Grade of filtration 5 µm: colour blue
Grade of filtration 40 µm: colour white

Pressure gauge MA

	Size	Pneumatic connection	Indicating range	Product weight	Part no.	Type
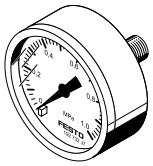	Diameter 40 mm	G1/8	0 ... 10 bar	60 g	**359874**	**MA-40-10-1/8**
			0 ... 16 bar		**345395**	**MA-40-16-1/8**
	Diameter 50 mm	G1/4	0 ... 10 bar	70 g	**359873**	**MA-50-10-1/4**
			0 ... 16 bar		**356759**	**MA-50-16-1/4**

Regulator lock LRVS

	Size	LABS (PWIS) conformity	Product weight	Part no.	Type
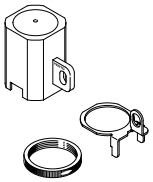	Grid dimension 40 mm (without sub-bases)	VDMA24364-B1/B2-L	40 g	**193781**	**LRVS-D-MINI**
	Grid dimension 55 mm (without sub-bases)		60 g	**193782**	**LRVS-D-MIDI**
	Grid dimension 66 mm (without sub-bases)		36 g	**193784**	**LRVS-D-DI-MAXI**
			56 g	**193783**	**LRVS-D-MAXI**

Padlock LRVS-D

	Corrosion resistance class CRC [1]	LABS (PWIS) conformity	Product weight	Part no.	Type
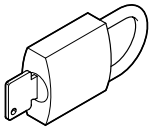	2 - Moderate corrosion stress	VDMA24364-B1/B2-L	120 g	**193786**	**LRVS-D**

1) More information: www.festo.com/x/topic/crc

Accessories

Special oil OPSW-32			
	Short type code	Part no.	Type
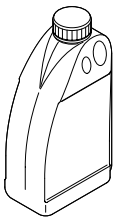	OFSW	**152811**	**OFSW-32**