Rotary Actuator

Series CRA1

Rack & Pinion Style/Size: 30, 50, 63, 80, 100

Models with cushion or with solenoid valve available.
(Only sizes 50 or larger are available.)

Angle adjustment is possible.
Size 30·····Fine angle adjuster is standard equipment.
Size 50 or larger···Angle adjustable type

Auto switch is mountable.
Adjustment of switch location is easy with rail mounting.

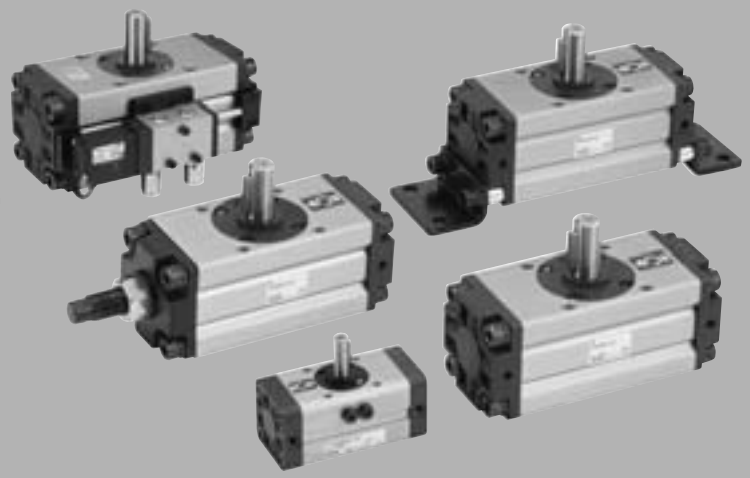

CRB2
CRBU2
CRB1
MSU
CRJ
CRA1
CRQ2
MSQ
MSZ
CRQ2X
MSQX
MRQ
D-□

Series Variations

	Fluid		Air					Hydraulic oil				Page
	Size		30	50	63	80	100	50	63	80	100	
Standard	Rotating angle	90°	●	●	●	●	●	●	●	●	●	P.192 to P.220
		100°		●	●	●	●	●	●	●	●	
		180°	●	●	●	●	●	●	●	●	●	
		190°		●	●	●	●	●	●	●	●	
	Shaft type	Single shaft S		●	●	●	●	●	●	●	●	
		Double shaft W	●	●	●	●	●	●	●	●	●	
		Single shaft with four chamfers X		●	●	●	●	●	●	●	●	
		Double shaft key Y		●	●	●	●	●	●	●	●	
		Double shaft with four chamfers Z		●	●	●	●	●	●	●	●	
	Cushion	None	●	●	●	●	●	●	●	●	●	
		Air cushion		●	●	●	●					
	Variations	With auto switch	●	●	●	●	●	●	●	●	●	
		Angle adjustable type		●	●	●	●					
		With solenoid valve		●	●	●	●					
		Clean series 11-	●	●								
		Copper-free and fluorine-free (Standard) 20-	●	●	●	●	●					
		With One-touch fittings	●	●	●							
		Flange F		●	●	●	●	●	●	●	●	
Option	Mounting bracket	Foot L	●	●	●	●	●	●	●	●	●	
Made to Order	Shaft type	Single shaft S	●									P.195 to P.197
		Single shaft with four chamfers X	●									
		Double shaft key Y	●									
		Double shaft with four chamfers Z	●									
		Single round shaft T	●	●	●	●	●	●	●	●	●	
		Double shaft (Round, With four chamfers) J	●	●	●	●	●	●	●	●	●	
		Double round shaft K	●	●	●	●	●	●	●	●	●	
	Pattern	Shaft end form	●	●	●	●	●	●	●	●	●	P.222 to P.242
		End of rotation		●	●	●	●	●	●	●	●	
		Port location	●	●	●	●	●	●	●	●	●	
	Shaft, Bolt, Parallel key stainless steel spec. -X6		●	●	●	●	●					
	Operating temp.	Heat resistance 100°C -X7	●	●	●	●	●					
	Both sides angle adjustable -X10			●	●	●	●					
	One side angle adjustable, One side with cushion -X11			●	●	●	●					
	Fluororubber seal -X16		●	●	●	●	●					

Rotary Actuator

Series CRA1

Rack & Pinion Style/Size: 30, 50, 63, 80, 100

How to Order

Size 30

Size 50 to 100

CRA1 B W ☐ 30 – 90 ——— ☐

CRA1 B S ☐ ☐ 50 – 90 ☐ – ☐

Mounting style

B	Basic style
L	Foot style

Rod end shape
Double shaft
Refer to pages 195 and 197 for the rod-end shape variations.

Rotating angle

90	90°
180	180°

Mounting style

B	Basic style
L *	Foot style
F	Flange style

* For part numbers, refer to the tables below.

Shaft type

Standard	S	Single shaft
	W	Double shaft
Option	X	Single shaft with four chamfers
	Y	Double shaft key
	Z	Double shaft with four chamfers

* Refer to page 196 for the rod-end shape variations.

Type

Nil	Pneumatic
H	Air-hydro

Pattern

Nil	Standard
P	Combination of Simple specials/Made to Order

* Refer to pages 222 to 242 for details.

Size

50
63
80
100

Rotating angle

Standard	90	90°
	180	180°
Option	100	100°
	190	190°

Air cushion

Nil	None
C *	With air cushion

* For pneumatic type only.

Made to Order or port type
Refer to page 194 for Made to Order.

Nil	Rc
XF *	G
XN *	NPT

* These cannot be combined with Made to Order.
* Except the air-hydro type.
* Except size 30.

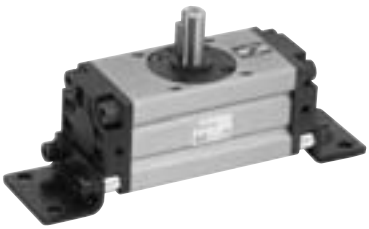

Foot Bracket Part No.

Size	Foot bracket	Description	Mounting screws included in foot bracket
30	CRA1L30-Y-1	Foot bracket : 2 pcs. Mounting thread : 4 pcs. Collar * : 4 pcs.	M5 x 0.8 x 25
50	CRA1L50-Y-1		M8 x 1.25 x 35
63	CRA1L63-Y-1		M10 x 1.5 x 40
80	CRA1L80-Y-1		M12 x 1.75 x 50
100	CRA1L100-Y-1		M12 x 1.75 x 50

* Size 30 does not include collars.

Rotary Actuator with Auto Switch

Series CDRA1

Rack & Pinion Style/Size: 30, 50, 63, 80, 100

How to Order

Mounting style

B	Basic style
L	Foot style

Rod end shape
Double shaft
Refer to pages 195 and 197 for the rod-end shape variations.

Rotating angle

90	90°
180	180°

Size 30: C D RA1 [B] [W] [ ] 30 – [90] —— [J79W] [ ] – [ ]

Size 50 to 100: C D RA1 [B] [S] [ ] [ ] [50] – [90] [ ] – [J59W] [ ] – [ ]

Built-in magnet

Mounting style

B	Basic style
L *	Foot style
F	Flange style

* For part numbers of foot bracket, refer to page 192.

Shaft type

Standard	S	Single shaft
	W	Double shaft
Option	X	Single shaft with four chamfers
	Y	Double shaft key
	Z	Double shaft with four chamfers

* Refer to page 196 for the rod-end shape variations.

Type

Nil	Pneumatic
H	Air-hydro

Size

50
63
80
100

Rotating angle

Standard	90	90°
	180	180°
Option	100	100°
	190	190°

Pattern

Nil	Standard
P	Combination of Simple specials/Made to Order

* Refer to pages 222 to 242 for details.

Number of auto switches

S	1 pc.
Nil	2 pcs.

Note) Maximum number of auto switches mountable is two.

Auto switch
* For the applicable auto switch model, refer to the table below.

Air cushion

Nil	None
C *	With air cushion

* For pneumatic type only.

Made to Order or port type
Refer to page 194 for Made to Order.

Nil	Rc
XF *	G
XN *	NPT

* These cannot be combined with Made to Order.
* Except the air-hydro type.
* Except size 30.

Applicable Auto Switch/Refer to pages 761 to 809 for further information on auto switches.

Type	Special function	Electrical entry	Indicator light	Wiring (Output)	Load voltage DC	Load voltage DC	Load voltage AC	Auto switch model Size 30 Perpendicular	Auto switch model Size 30 In-line	Auto switch model Size 50 to 100 In-line	Lead wire * length (m) 0.5 (Nil)	3 (L)	5 (Z)	None (N)	Pre-wired connector	Applicable load	
Solid state switch	——	Grommet	Yes	3-wire (NPN)	24V	5V, 12V	——	F7NV	F79	F59	●	●	○	—	○	IC circuit	Relay, PLC
				3-wire (PNP)				F7PV	F7P	F5P	●	●	○	—	○		
				2-wire		12V		F7BV	J79	J59	●	●	○	—	○	——	
					——	——	100V, 200V	——	——	J51	●	●	○	—	—		
		Connector				12V		J79C	——	——	●	●	●	●	—		
	Diagnosis indication (2-color)	Grommet		3-wire (NPN)		5V, 12V		F7NWV	F79W	F59W	●	●	○	—	○	IC circuit	
				3-wire (PNP)				——	F7PW	F5PW	●	●	○	—	○		
				2-wire		12V		F7BWV	J79W	J59W	●	●	○	—	○	——	
	Water resistant (2-color)							F7BAV **	F7BA **	F5BA **	—	●	○	—	○		
	Diagnosis output (2-color)			4-wire (NPN)		5V, 12V		——	F79F	F59F	●	●	○	—	○	IC circuit	
Reed switch	——	Grommet	Yes	3-wire (NPN equiv.)	——	5V	——	——	A76H	A56	●	●	—	—	—	IC circuit	——
				2-wire	——	——	200V	A72	A72H	——	●	●	—	—	—	——	Relay, PLC
					24V	12V	100V	A73	A73H	——	●	●	●	—	—		
			No				100 V or less	A80	A80H	——	●	●	—	—	—	IC circuit	
		Connector	Yes				——	A73C	——	——	●	●	●	●	—	——	
		Grommet						——	——	A53	●	●	●	—	—		
		Connector	No					A80C	——	——	●	●	●	●	—	IC circuit	
		Grommet	Yes			——	100V, 200V	——	——	A54	●	●	●	—	—	——	
			No			12V	200 V or less	——	——	A64	●	●	—	—	—		
							——	——	——	A67	●	●	—	—	—	IC circuit	PLC
	Diagnosis indication (2-color)		Yes			——	——	A79W	——	A59W	●	●	—	—	—	——	Relay, PLC

** Although it is possible to mount water resistant type auto switches, note that the rotary actuator itself is not of water resistant construction.
* Lead wire length symbols: 0.5 m ····· Nil (Example) A73C
3 m ····· L (Example) A73CL
5 m ····· Z (Example) A73CZ
None ····· N (Example) A73CN
* Auto switches marked with "○" are made to order specifications.

• Refer to page 199 for applicable switches other than those indicated above.
* Auto switches are shipped together, (but not assembled).

Refer to pages 796 and 797 for detailed solid state auto switches with pre-wired connectors.

Made to Order
(Refer to pages 222 to 242 for details.)

Symbol	Specifications/Description	Applicable shaft type
—	Shaft type variations	S,X,Y,Z,T,J,K
XA1 to XA24	Shaft pattern sequencing I	S,W,Y
XA33 to XA59	Shaft pattern sequencing II	X,Z,T,J,K
XC7	Reversed shaft	S,W,X,T,J
XC8 to XC11	Change of rotation range	S,W,Y
XC30	Fluorine grease	S,W,X,Y,Z,T,J,K
XC31 to XC36	Change of rotation range and rotation direction of shaft	S,W,Y
XC37 to XC46	Change of rotation range and angle adjusting direction	S,W,Y
XC47 to XC58	Change of rotation range and angle adjusting direction (Angle adjusting screw is equipped on the left.)	S,W,Y
XC59 to XC61	Change of port direction	S,W,X,Y,Z,T,J,K
XC63, XC64	One side air-hydro, One side air	S,W,X,Y,Z,T,J,K
X6	Stainless steel specifications for main parts	S,W,X,Y,Z,T,J,K
X7 *	Heat resistant type (100°C)	S,W,X,Y,Z,T,J,K
X10	Both sides angle adjustable type	S,W,X,Y,Z,T,J,K
X11	One side angle adjustable, One side cushion	S,W,X,Y,Z,T,J,K
X16	Fluororubber seal	S,W,X,Y,Z,T,J,K

* X7: Not available for the built-in magnet type.

JIS Symbol

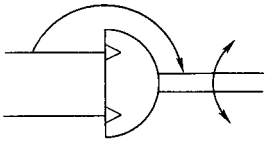

Specifications

Type	Pneumatic					Air-hydro			
Size	30	50	63	80	100	50	63	80	100
Fluid	Air (Non-lube)					Hydraulic oil			
Max. operating pressure	1.0 MPa								
Min. operating pressure	0.1 MPa								
Ambient and fluid temperature	0 to 60°C (No freezing)								
Cushion	None	Not attached, Air cushion				None			
Output (N·m) (1)	1.9	9.3	17	32	74	9.3	17	32	74
Allowable surge pressure	—					1.5 MPa			
Backlash	(2)	Within 1°							
Tolerance in rotating angle	—	+ 4° 0							

Note 1) Output under the operating pressure of 0.5 MPa. Refer to page 40 for further information.
Note 2) Since CRA1□30 has a stopper installed, there is no backlash produced under pressure.

Allowable Kinetic Energy/Safe Range of Rotation Time

Model	Allowable kinetic energy			Adjustable range of rotation time safe in operation
	Allowable kinetic energy (J)		Cushion angle	
	Without cushion	With cushion Note)		Rotation time (s/90°)
CRA1□W 30	0.01	—	—	0.2 to 1
CRA1□□ 50	0.05	0.98	35°	0.2 to 2
CRA1□□ 63	0.12	1.50	35°	0.2 to 3
CRA1□□ 80	0.16	2.00	35°	0.2 to 4
CRA1□□100	0.54	2.90	35°	0.2 to 5

Note) Allowable kinetic energy of the bumpers equipped model
The maximum absorbed energy under proper adjustment of the cushion needle.

Mass/Standard

(kg)

Model	Standard mass		Additional mass	
	90°	180°	Foot bracket	Flange bracket
CRA1BW 30	0.3	0.4	0.1	—
CRA1BW 50	1.5	1.7	0.3	0.5
CRA1BW 63	2.5	3	0.5	0.9
CRA1BW 80	4.3	5	0.9	1.5
CRA1BW100	8.5	9.5	1.2	2

Mass/With Auto Switches and Solenoid Valves

(kg)

Size	Additional mass	
	With 2 auto switches	With solenoid valve *
30	0.1	—
50	0.2	0.2
63	0.4	0.2
80	0.6	0.2
100	0.9	0.2

* Mass of the solenoid valve is not included. Refer to page 209 concerning weight of the solenoid valve.

With One-touch Fittings

CRA1 [Mounting] [Shaft type] [Size] F – [Rotating angle] [Suffix symbol]

• With One-touch fittings

Piping steps and installation space are saved by One-touch fittings built in the connection ports.

Specifications

Applicable size	30, 50, 63
Type	Pneumatic
Max. operating pressure	1.0 MPa
Min. operating pressure	0.1 MPa
Auto switch	Mountable

Refer to pages 202, 204 and 206 for the dimensions.

Applicable Tubing Specifications

Size	30	50	63
Applicable tubing O.D.	ø4	ø6	
Applicable tubing material	Nylon, Soft nylon, Polyurethane		

Clean Series

11–CRA1 [Mounting] [Shaft type] [Size] – [Rotating angle] [Suffix symbol]

• Clean Series

Vacuum ports are equipped to prevent dust from being produced from the rod part of the rotary actuators.

Specifications

Applicable size	30, 50
Type	Pneumatic
Max. operating pressure	1.0 MPa
Min. operating pressure	0.1 MPa
Auto switch	Mountable

For further specifications, refer to "Pneumatic Clean Series" catalog.

Copper-free and Fluorine-free Rotary Actuator

No influence on cathode ray tubes by copper ion and fluorine resin. As standard models are already made applicable to copper-free and fluorine-free styles, they can be applied as they are.

Specifications

Applicable size	30, 50, 63, 80, 100
Type	Pneumatic
Max. operating pressure	1.0 MPa
Min. operating pressure	0.1 MPa
Auto switch	Mountable

Shaft Type Variations/Without Key Grooves (Size 30)

Shaft Type: T, J, K

Refer to "How to Order" on pages 192 and 193.

C□RA1 [Mounting] [Shaft type] 30 – [Rotating angle]

• Shaft type

T	Single round shaft
J	Double shaft (Long shaft without key and with four chamfers)
K	Double round shaft

Specifications

Size	30
Type	Pneumatic
Shaft type	Single round shaft (T), Double round shaft (K), Double shaft/(Long shaft without key and with four chamfers) (J)
Cushion	None
Auto switch	Mountable
Mounting	Basic style, Foot style

∗ Refer to page 194 for other specifications.

Dimensions

(mm)

Shaft type	T (Single round shaft)	J (Double shaft/Long shaft without key and with four chamfers)	K (Double round shaft)
Configuration	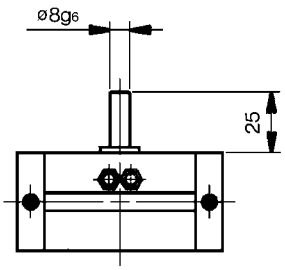	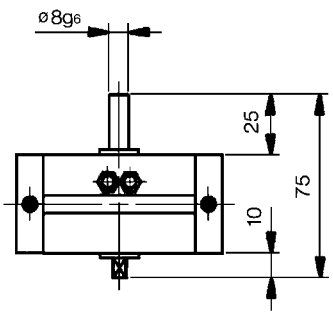	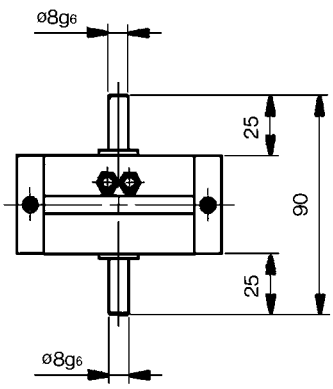

Shaft Variations/Without Keyway (Size 50 to 100)

Shaft Type: T, J, K

C□RA1 | Mounting | Shaft type | Size | Rotating angle | |

Air cushion

Nil	None
C	With air cushion

Refer to "How to Order" on pages 192, 193, 208 and 214.

Shaft type

T	Single round shaft
J	Double shaft (Long shaft without key and with our chamfers)
K	Double round shaft

Specifications

Size	50, 63, 80, 100	
Type	Pneumatic	Air-hydro
Fluid	Air (Non-lube)	Hydraulic oil
Shaft type	Single round shaft (T), Double round shaft (K), Double shaft/Long shaft without key and with four chamfers (J)	
Cushion	Not attached, Air cushion	None
Auto switch	Mountable	
Mounting	Basic style, Foot style	

Note) Except flange style.
∗ Refer to page 194 for other specifications.

Dimensions

(mm)

Shaft type	**T** (Single round shaft)		**J** (Double shaft/Long shaft without key & with four chamfers)					**K** (Double round shaft)		
Configuration	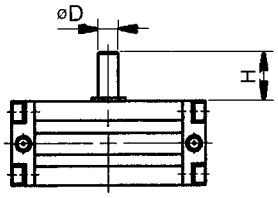		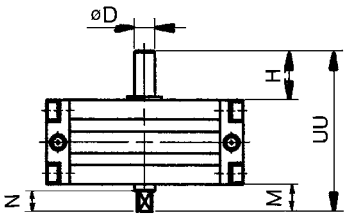					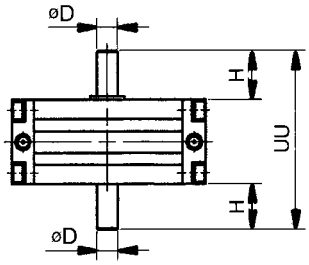		
Size	**D** (g6)	**H**	**D** (g6)	**H**	**M**	**N**	**UU**	**D** (g6)	**H**	**UU**
50	15	36	15	36	20	15	118	15	36	134
63	17	41	17	41	22	17	139	17	41	158
80	20	50	20	50	25	20	167	20	50	192
100	25	60	25	60	30	25	202	25	60	232

∗ Refer to pages 204 and 206 for other specifications.

Shaft Variations (Size 30)

Shaft Type: S, X, Y, Z

C□RA1 **Mounting** **Shaft type** 30 – **Rotating angle**

Refer to "How to Order" on pages 192 and 193.

Shaft type

S	Single shaft key
X	Single shaft with four chamfers
Y	Double shaft key
Z	Double shaft with four chamfers

Specifications

Size	30
Type	Pneumatic
Max. operating pressure (MPa)	1.0 MPa
Min. operating pressure (MPa)	0.1 MPa
Shaft type	Single shaft key (S), Single shaft with four chamfers (X), Double shaft key (Y), Double shaft with four chamfers (Z)
Mounting	Basic style, Foot style
Auto switch	Mountable

∗ Refer to page 194 for other specifications.

S (Single shaft key)

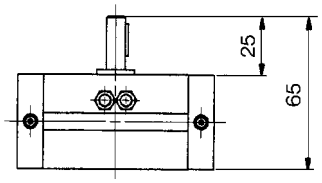

X (Single shaft with four chamfers)

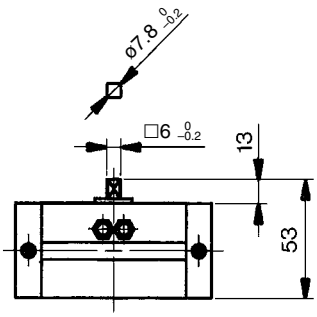

Y (Double shaft key)

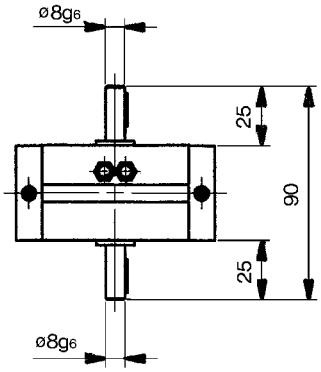

Z (Double shaft with four chamfers)

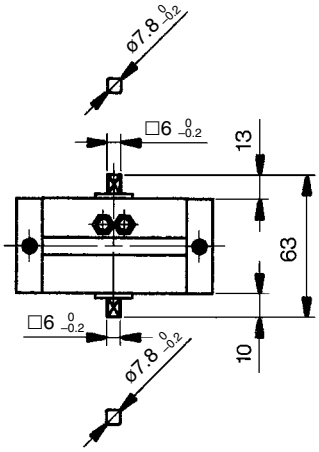

Rotation Range of Keyway

If air pressure is applied from the A port side of the direction indication label, the shaft rotates clockwise. If air pressure is applied from the B port side, the shaft rotates counterclockwise.

Size: 30

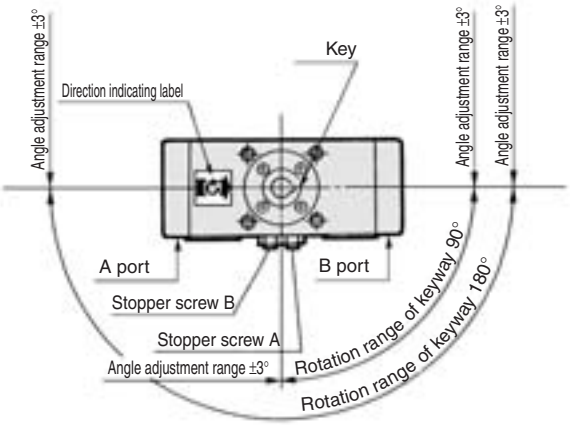

Size: 50 to 100

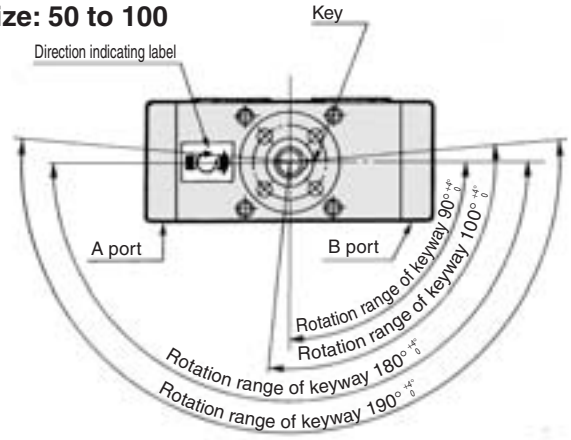

· Stopper screw A: For end adjustment in clockwise direction
· Stopper screw B: For end adjustment in counter clockwise direction

How to Set Rotation Time

Even if the torque that is generated by the rotary actuator is small, the parts could become damaged depending on the inertia of the load. Therefore, the rotation time should be determined by calculating the load's inertial moment and kinetic energy. Refer to pages 31 and 33 for details on how to set the rotation time.

Allowable load on the shaft

Refer to the model selecting order step for rotary actuators on page 37 concerning allowable loads on the shafts of Series CRA1.

How to Use the Air-hydro Type

Caution on Design

⚠ Warning

1. **Do not use a rotary actuator of the air-hydro type near flames, or in equipment or machinery that exceeds an ambient temperatures of 60°C.**
   There is a danger of causing a fire because the rotary actuator of the air-hydro type uses a flammable hydraulic fluid.

⚠ Caution

1. **Do not use in an environment, equipment, or machine that is not compatible with oil mist.**
   Rotary actuators of the air-hydro types generate an oil mist during operation which may affect the environment.
2. **Be sure to install an exhaust cleaner on the directional control valve for the rotary actuator of the air-hydro type.**
   A very small amount of hydraulic fluid is discharged from the exhaust port of the rotary actuator of the air-hydro type's directional control valve, which may contaminate the surrounding area.
3. **Install a rotary actuator of the air-hydro type in locations where it can be serviced easily.**
   Since the rotary actuator of the air-hydro type requires maintenance, such as refilling of hydraulic fluid and bleeding of air, ensure sufficient space for these activities.
4. **Do not use in cases where external leakage of hydraulic oil may adversely affect equipment or machinery.**
   Although it only occurs in minute amounts, a certain amount of sliding leakage from the piston seal is unavoidable with the rotary actuator of the air-hydro type. Because of the construction of the rotary actuator of the air-hydro type, hydraulic oil may leak into the outside due to sliding leakage.

Selection

⚠ Caution

1. **Select the rotary actuator of the air-hydro type based on the combination with the air-hydro unit.**
   Select a proper air-hydro unit that is necessary for good operation of the rotary actuator of the air-hydro type.

Piping

⚠ Caution

1. **Use self-align fittings in conjunction with the piping for the rotary actuator of the air-hydro type.**
   Do not use a one-touch fitting with the piping for the rotary actuator of the air-hydro type, as this may result in oil leakage.
2. **For rotary actuator of the air-hydro type piping, use hard nylon tubing or copper piping.**
   As in the case of hydraulic circuits, surge pressures greater than the operating pressure may occur in a rotary actuator of the air-hydro type's piping, making it necessary to use safer piping materials.

Lubrication

⚠ Warning

1. **Make sure to completely discharge the compressed air in the system before filling the air-hydro unit with hydraulic oil.**
   When supplying hydraulic fluid to the air-hydro unit, first confirm that safety measures are implemented to prevent dropping of objects and the release of clamped objects, etc. Then, shut off the air supply and the equipment's electric power and exhaust the compressed air in the system.
   If the air-hydro unit's supply port is opened with compressed air still remaining in the system, there is a danger of hydraulic fluid being blown out.

Maintenance

⚠ Caution

1. **Bleed air from the rotary actuator of the air-hydro type on a regular basis.**
   Since air may accumulate inside a rotary actuator of the air-hydro type, bleed air from it, for example before starting work. Bleed air from a bleeder valve provided on the rotary actuator of the air-hydro type or the piping.
2. **Verify the oil level of the air-hydro system on a regular basis.**
   Since a very small amount of hydraulic fluid is discharged from the rotary actuator of the air-hydro type and air-hydro unit circuit, the fluid will gradually decrease. Therefore, check the fluid regularly and refill as necessary.
   The oil level can be checked with a level gauge in the air-hydro converter.

Rotation Range of Keyway/Auto Switch Mounting Position

Size: 30
CDRA1□W30

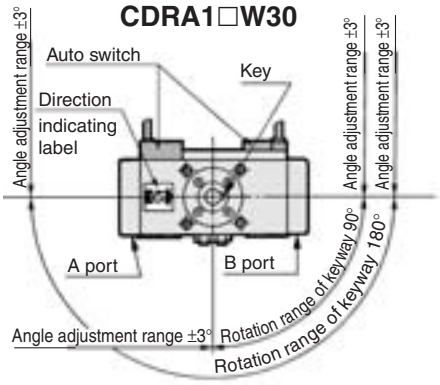

Size: 50 to 100
CDRA1□□50 to 100

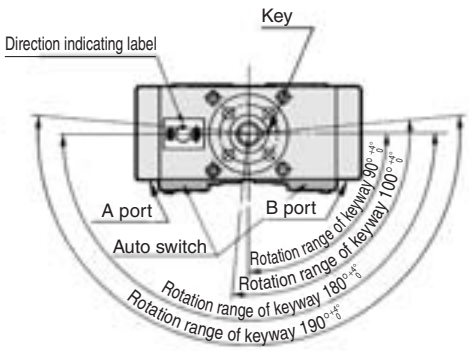

Working Principle

In the diagram below, auto switch B is ON. When pressure is applied from A, the piston moves to B, causing the shaft to rotate clockwise. At this time, magnet B goes out of the movement range of auto switch B, causing auto switch B to turn OFF. Furthermore, the piston moves to the right, causing magnet A to enter the movement range of auto switch A. As a result, auto switch A turns ON.

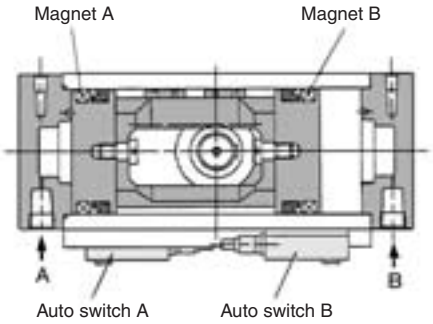

Proper Auto Switch Mounting Position at Rotation End

CDRA1□W30

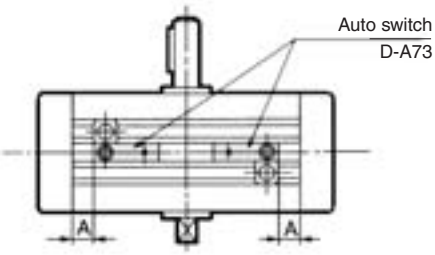

CDRA1□□50 to 100

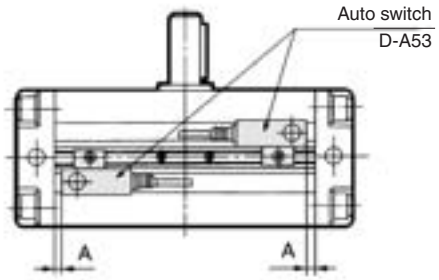

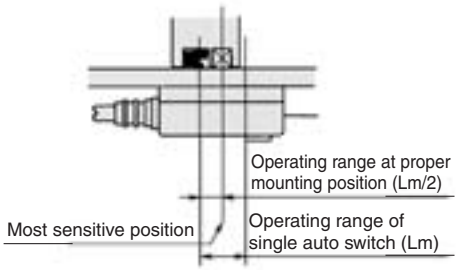

Operating angle θ m: Converts the operating range (Lm) of the auto switch into the rotation angle.
Angle of hysteresis: The hysteresis of the auto switch is converted to degrees.

Model	A (mm)	Operating angle θ m	Hysteresis angle
CDRA1□W30-90	9 (19)	95°	20°
CDRA1□□50-90	9 (26)	65°	20°
CDRA1□□63-90	11 (30)	60°	10°
CDRA1□□80-90	15 (37)	45°	7°
CDRA1□□100-90	27 (60)	35°	5°

∗ The dimensions inside ( ) are for 180°. ∗∗ Up to 2 auto switches can be mounted per actuator.
Note) The values given in the table above are representative values.
In the actual setting, adjust the value after confirming the auto switch performance.
★ Please consult with SMC concerning the angles for the auto switches other than the models D-A73 and D-A53.

Auto switches in addition to those listed above are also available.

Auto Switch Specifications/Refer to page 761 to 809 for further information on auto switch single body.

Type	Model	Electrical entry	Features	Applicable size
Solid state switch	D-F7NTL	Grommet (In-line)	With timer	30
	D-F5NTL	Grommet (In-line)		50 to 100

∗ With pre-wire connector is also available for D-F5NTL, D-F7NTL. For details about pre-wire connectors, refer to pages 796 and 797.

Sets of Mounting Screws for Auto Switch

Model	Part no.	Description
CDRA1□W30	P294010-24	Round head Phillips screw: 2 pcs.
CDRA1□□50 to 100	P294020-24	Hexagon nut: 2 pcs.

Note 1) The above part numbers include 2 pieces of mounting screws and 2 pieces of nuts.
Note 2) To order a set for 1 unit, the ordering quantity should be "1".

Construction

Without air cushion
Size: 30

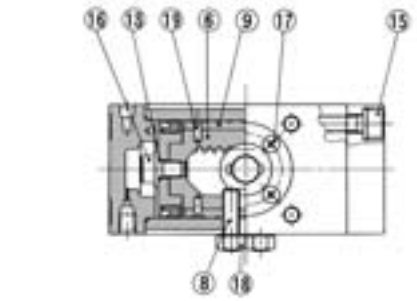

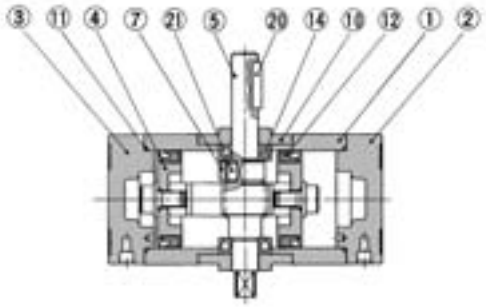

Without air cushion
Size: 50 to 100

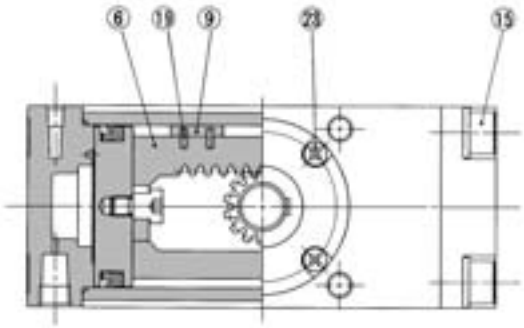

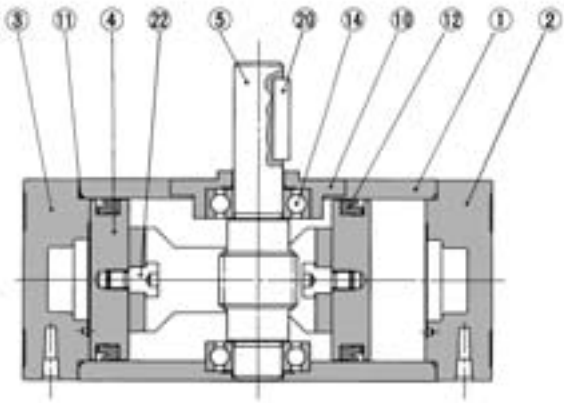

Component Parts

No.	Description	Material	Note
①	**Body**	Aluminum alloy	Anodized
②	**Right cover**	Aluminum alloy	Anodized
③	**Left cover**	Aluminum alloy	Anodized
④	**Piston**	Aluminum alloy	Chromated
⑤	**Shaft**	Chrome molybdenum steel	
⑥	**Rack**	Carbon steel	
⑦	**Stopper**	Chrome molybdenum steel	
⑧	**Stopper screw**	Chrome molybdenum steel	Black dyed
⑨	**Slider**	Resin	
⑩	**Bearing retainer**	Zinc alloy Note)	Black painted
⑪	**Tube gasket**	NBR	

Note) Size 50 to 100: Aluminum alloy (Anodized)

Component Parts

No.	Description	Material	Note
⑫	**Piston seal**	NBR	
⑬	**O-ring**	NBR	
⑭	**Bearing**	Bearing steel	
⑮	**Hexagon socket head cap screw with spring washer**	Chrome molybdenum steel	Black zinc chromated
⑯	**Hexagon socket head cap flange screw**	Chrome molybdenum steel	Zinc chromated
⑰	**Cross-recessed countersunk head screw**	Steel wire	Black dyed
⑱	**Hexagon nut**	Steel wire	Black dyed
⑲	**Spring pin**	Steel wire	
⑳	**Parallel key**	Carbon steel	
㉑	**Parallel key**	Carbon steel	
㉒	**Connecting screw**	Carbon steel	Zinc chromated
㉓	**Round head Phillips screw**	Steel wire	Black zinc chromated

With air cushion

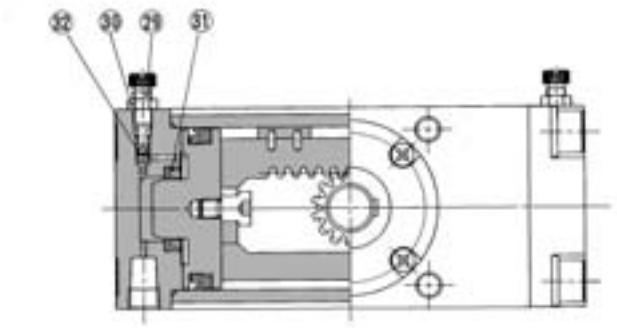

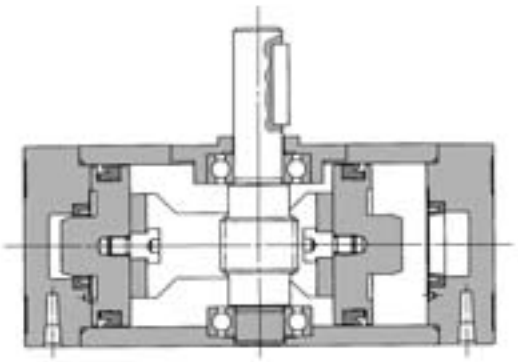

With auto switch
Size: 30

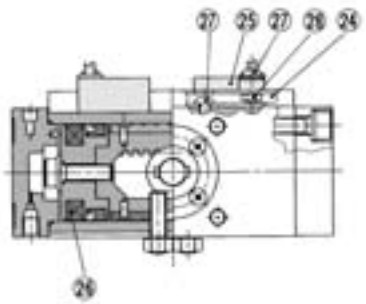

Size: 50 to 100

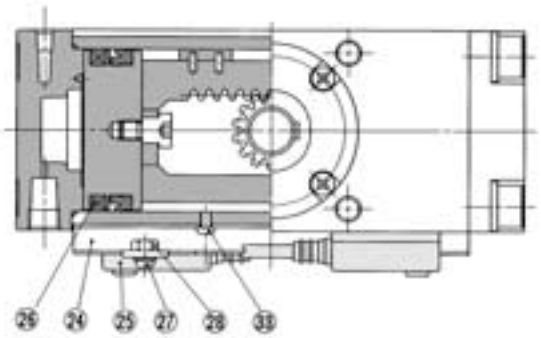

Component Parts

No.	Description	Material	Note
㉔	**Auto switch mounting rail**	Aluminum alloy	
㉕	**Auto switch**	—	
㉖	**Plastic magnet**	Magnetic material	
㉗	**Round head Phillips screw**	Steel wire	Nickel plated
㉘	**Hexagon nut**	Steel wire	Nickel plated
㉙	**Needle valve**	Steel wire	Nickel plated
㉚	**Lock nut**	Steel wire	Nickel plated
㉛	**Cushion seal**	NBR	
㉜	**O-ring**	NBR	
㉝	**Round head Phillips screw**	Steel wire	Nickel plated

Replacement Parts (Corresponding parts shown below are set.)

Size	Replacement parts			
	Standard	With air cushion	With auto switch	Air-hydro
CRA1□W 30-90	P294010-20	——	P294010-20	——
CRA1□W 30-180	P294010-21	——	P294010-21	——
CRA1□□50	P294020-20A	P294020-20A	P294020-20A	P294020-23A
CRA1□□63	P294030-20A	P294030-20A	P294030-20A	P294030-23A
CRA1□□80	P294040-20	P294040-20	P294040-20	P294040-23
CRA1□□100	P294050-20A	P294050-20A	P294050-20A	P294050-23A

	No.	Description	Quantity
Corresponding parts	**9**	**Slider**	2
	11	**Tube gasket**	2
	12	**Piston seal**	2
	19	**Spring pin**	4

Note) When ordering spare parts, write "1 piece" for 1 set of the parts for one actuator.
Note) The air-hydro types comes with 4 sliders and 8 spring pins.

A grease pack (10 g) is included. If an additional grease pack is needed, order with the following part number.
Grease pack part no.: GR-S-010 (10 g)

Size 30/Basic Style: CRA1BW, Foot Style: CRA1LW

This drawing is for 90° specifications.

Basic style: CRA1BW30

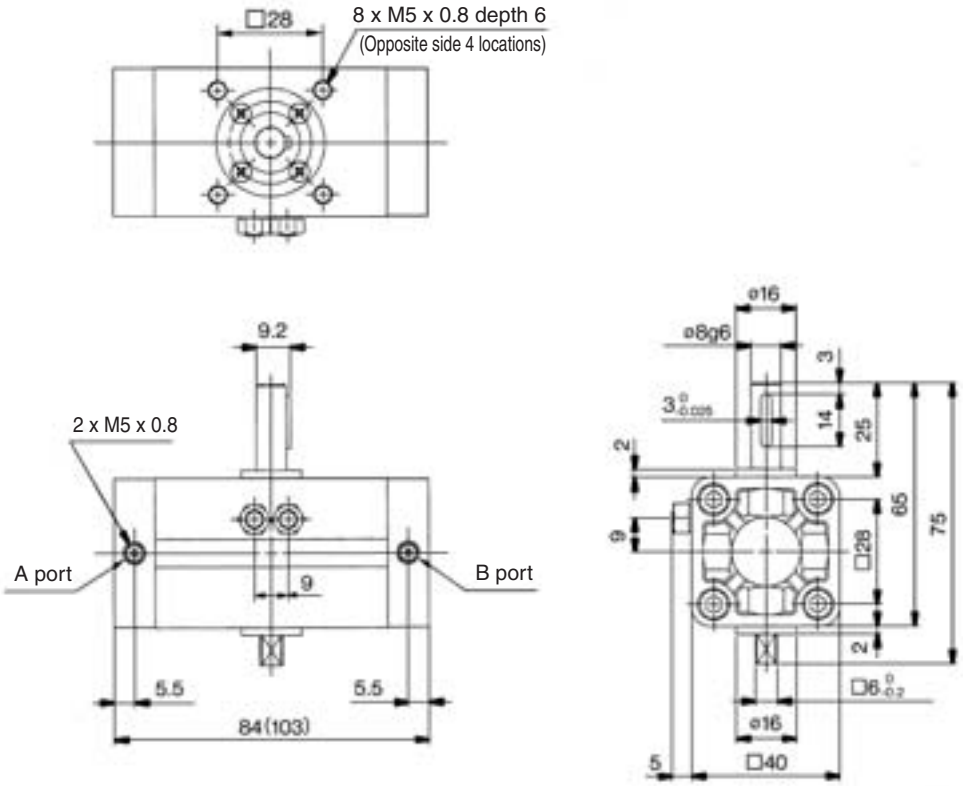

Foot style: CRA1LW30

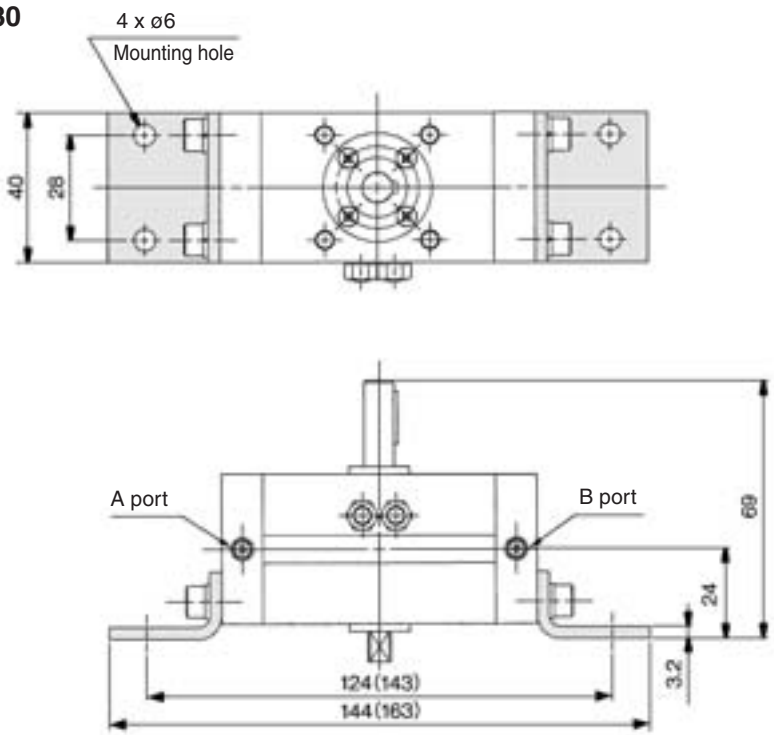

∗ ( ) are the dimensions for rotation of 180°.
⋆ The dimensions below show pressurization to B port.

Size 30/Basic Style: CDRA1BW, Foot Style: CDRA1LW

This drawing is for 90° specifications.

With auto switch
Basic style: CDRA1BW30

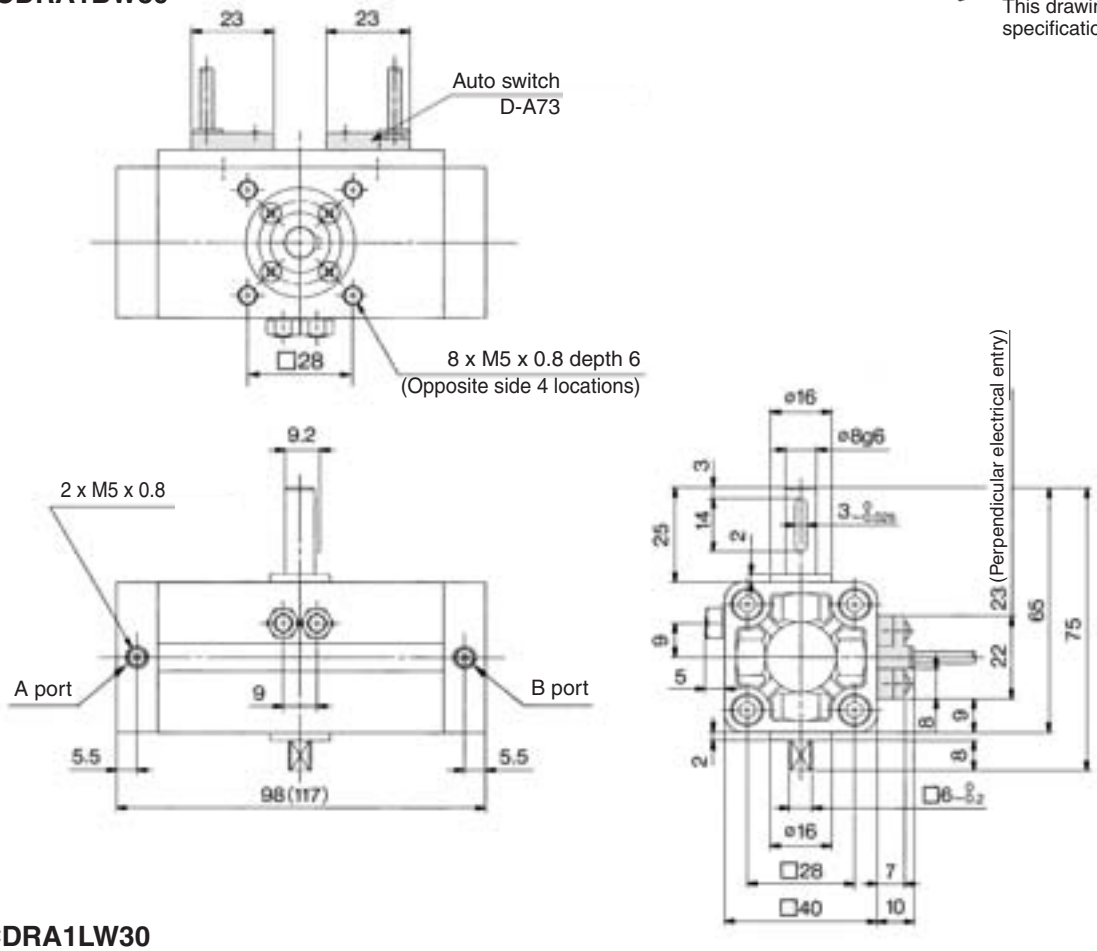

Foot style: CDRA1LW30

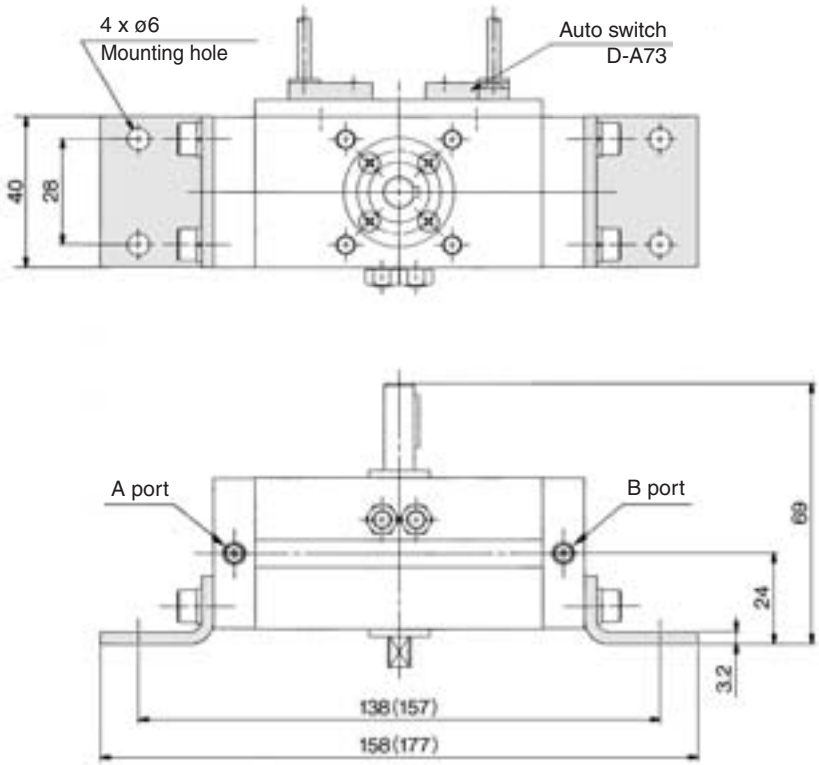

∗ ( ) are the dimensions for rotation of 180°.
⋆ The dimensions below show pressurization to B port.

Size 50, 63, 80, 100/Basic Style: CRA1B□

Size: 50 to 100

Single shaft type: CRA1BS

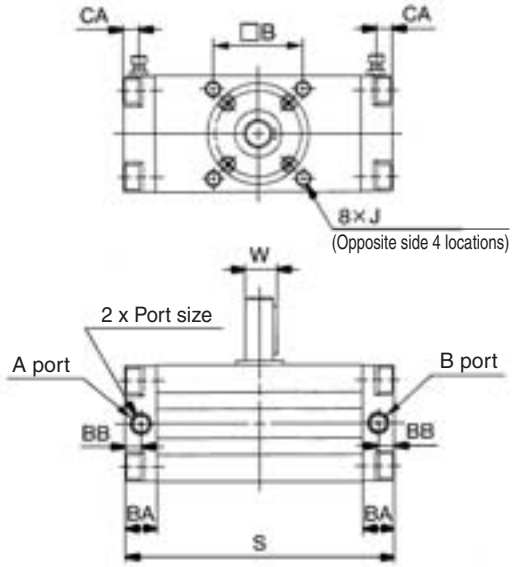

Single shaft

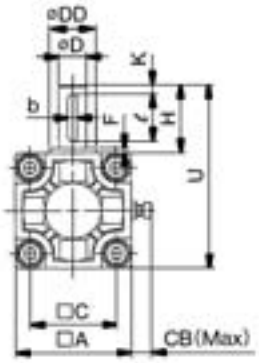

Double shaft type: CRA1BW
Double shaft

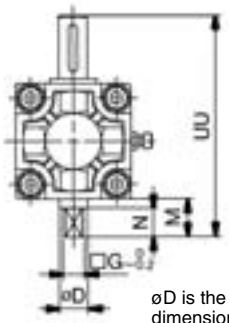

øD is the shaft dimension.

Note) Other dimensions are the same as the single shaft.

• The dimensions above show pressurization to B port.
∗ ( ) are the dimensions for rotation of 180° and 190°.

Model	Port size ∗	A	B	C	D (g6)	DD (h9)	F	H	J	K	S	U	W	BA	BB	⋆ CA	⋆ CB	Key dimensions b	Key dimensions ℓ
CRA1BS 50	Rc 1/8	62	48	46	15	25	2.5	36	M8 x 1.25 Depth 8	5	144 (177)	98	17	17	8.5	8.5	13	$5^{0}_{-0.030}$	25
CRA1BS 63	Rc 1/8	76	60	57	17	30	2.5	41	M10 x 1.5 Depth 12	5	163 (201.5)	117	19.5	20	10	10	14	$6^{0}_{-0.030}$	30
CRA1BS 80	Rc 1/4	92	72	70	20	35	3	50	M12 x 1.75 Depth 13	5	186 (230)	142	22.5	23.5	12	12	18	$6^{0}_{-0.030}$	40
CRA1BS100	Rc 3/8	112	85	85	25	40	4	60	M12 x 1.75 Depth 14	5	245 (311)	172	28	25	12.5	12.5	18	$8^{0}_{-0.036}$	45

∗ In addition to Rc, G and NPT are also available.

⋆ For model with air cushion

Model	D (g6)	G	M	N	UU	L
CRA1BW 50	15	11	20	15	118	14
CRA1BW 63	17	13	22	17	139	16
CRA1BW 80	20	15	25	20	167	19
CRA1BW100	25	19	30	25	202	24

Single shaft with four chamfers: CRA1BX

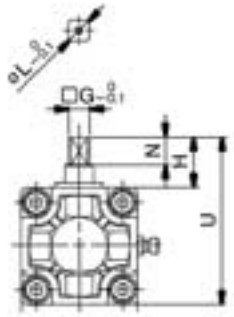

Note) Other dimensions are the same as the single shaft.

Model	G	H	N	U	L
CRA1BX 50	11	27	15	89	14
CRA1BX 63	13	29	17	105	16
CRA1BX 80	15	38	20	130	19
CRA1BX100	19	44	25	156	24

Double shaft key: CRA1BY

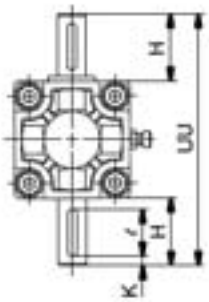

Note) Other dimensions are the same as the single shaft.

Model	H	K	UU	ℓ
CRA1BY 50	36	5	134	25
CRA1BY 63	41	5	158	30
CRA1BY 80	50	5	192	40
CRA1BY100	60	5	232	45

Double shaft with four chamfers: CRA1BZ

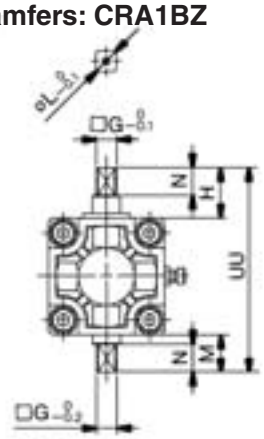

Note) Other dimensions are the same as the single shaft.

Model	G	H	M	N	UU	L
CRA1BZ 50	11	27	20	15	109	14
CRA1BZ 63	13	29	22	17	127	16
CRA1BZ 80	15	38	25	20	155	19
CRA1BZ100	19	44	30	25	186	24

Size 50, 63, 80, 100/Basic Style: CRA1B□

With auto switch
Single shaft type: CDRA1BS

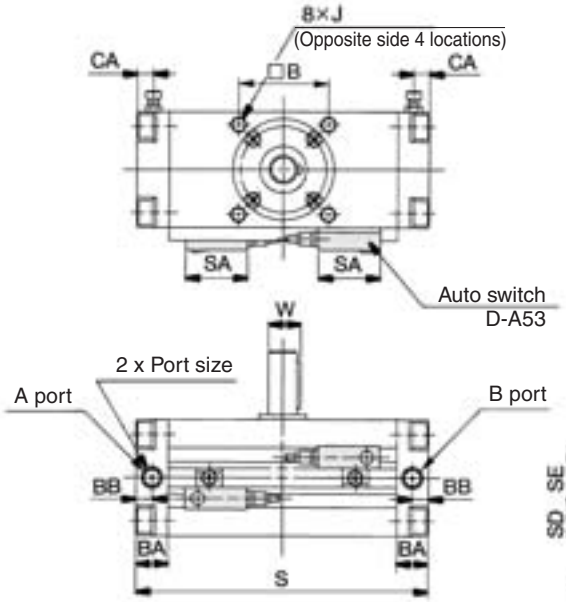

Single shaft

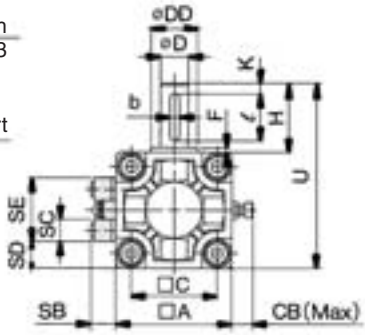

Double shaft type: CDRA1BW
Double shaft

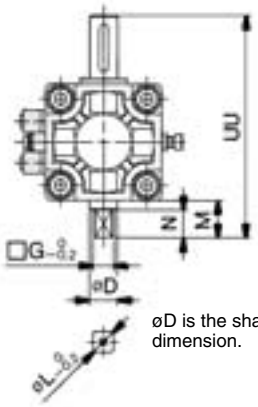

øD is the shaft dimension.

Double Shaft Type

Model	D (g6)	G	M	N	UU	L
CDRA1BW 50	15	11	20	15	118	14
CDRA1BW 63	17	13	22	17	139	16
CDRA1BW 80	20	15	25	20	167	19
CDRA1BW100	25	19	30	25	202	24

Single Shaft Type

⋆ The dimensions below show pressurization to B port.
∗ ( ) are the dimensions for rotation of 180° and 190°.

Model	Port size ∗	A	B	C	D (g6)	DD (h9)	F	H	J	K	S	U	W	BA	BB	CA	CB	SA	SB	SC	SD	SE	Key dimensions b	Key dimensions ℓ
CDRA1BS 50	Rc 1/8	62	48	46	15	25	2.5	36	M 8 x 1.25 depth 8	5	156 (189)	98	17	17	8.5	8.5	13	33	13.5	12	14	34	$5^{0}_{-0.030}$	25
CDRA1BS 63	Rc 1/8	76	60	57	17	30	2.5	41	M10 x 1.5 depth 12	5	175 (213.5)	117	19.5	20	10	10	14	33	14.5	12	21	34	$6^{0}_{-0.030}$	30
CDRA1BS 80	Rc 1/4	92	72	70	20	35	3	50	M12 x 1.75 depth 13	5	199 (243)	142	22.5	23.5	12	12	18	33	15.5	12	29	34	$6^{0}_{-0.030}$	40
CDRA1BS100	Rc 3/8	112	85	85	25	40	4	60	M12 x 1.75 depth 14	5	259 (325)	172	28	25	12.5	12.5	18	33	16	12	39	34	$8^{0}_{-0.036}$	45

∗ In addition to Rc, G and NPT are also available.

Single shaft with four chamfers: CDRA1BX□

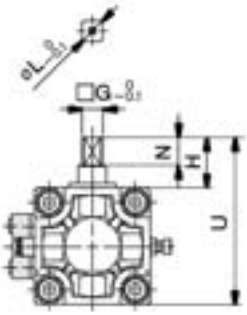

Note) Other dimensions are the same as the single shaft.

Model	G	H	N	U	L
CDRA1BX□50	11	27	15	89	14
CDRA1BX□63	13	29	17	105	16
CDRA1BX□80	15	38	20	130	19
CDRA1BX□100	19	44	25	156	24

Double shaft key: CDRA1BY□

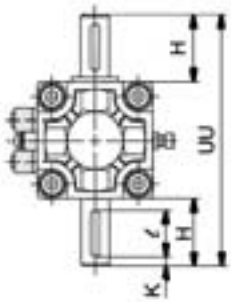

Note) Other dimensions are the same as the single shaft.

Model	H	K	UU	ℓ
CDRA1BY□50	36	5	134	25
CDRA1BY□63	41	5	158	30
CDRA1BY□80	50	5	192	40
CDRA1BY□100	60	5	232	45

Double shaft with four chamfers: CDRA1BZ□

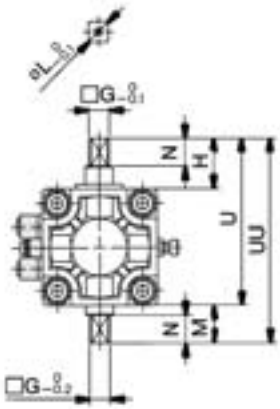

Note) Other dimensions are the same as the single shaft.

Model	G	H	M	N	U	UU	L
CDRA1BZ□50	11	27	20	15	89	109	14
CDRA1BZ□63	13	29	22	17	105	127	16
CDRA1BZ□80	15	38	25	20	130	155	19
CDRA1BZ□100	19	44	30	25	156	186	24

Size 50, 63, 80, 100/Foot Style: CRA1L□, Flange Style: CRA1F□

Foot style: CRA1L□

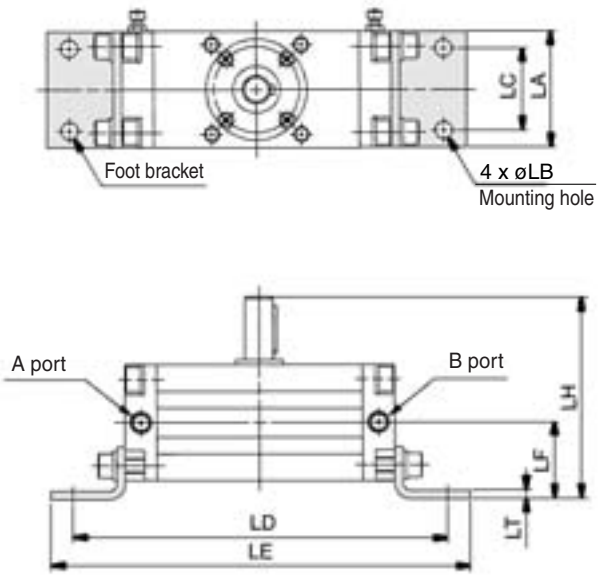

Flange style
Single shaft: CRA1FS

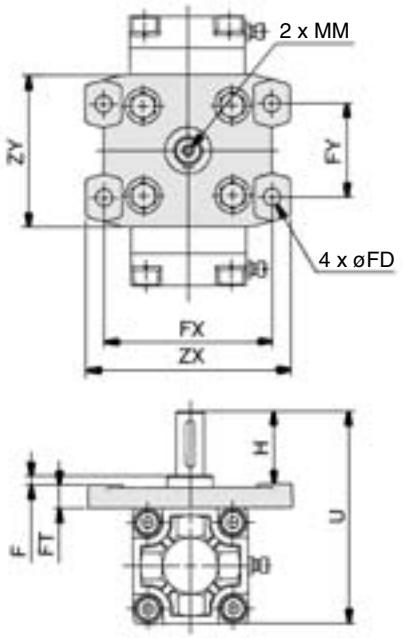

• Dimensions above show pressurization to B port.
∗ ( ) are the dimensions for rotation of 180° and 190°.

Model	LA	LB	LC	LD	LE	LF	LH	LT
CRA1L□□50	62	9	44	200 (233)	224 (257)	41	108	4.5
CRA1L□□63	76	11	55	235 (273.5)	263 (301.5)	48	127	5
CRA1L□□80	92	13	67	274 (318)	316 (360)	58	154	6
CRA1L□□100	112	13	87	333 (399)	375 (441)	73.5	189.5	6

Note) Other dimensions are the same as standard.

Model	F	H	MM	U	FD	FT	FX	FY	ZX	ZY
CRA1F□□50	4	39	M6 x 1.0 depth 12	114	9	13	90	50	110	81
CRA1F□□63	5	45	M6 x 1.0 depth 12	136	11.5	15	105	59	130	101
CRA1F□□80	5	55	M8 x 1.25 depth 16	165	13.5	18	130	76	160	119
CRA1F□□100	5	60	M10 x 1.5 depth 20	190	13.5	18	150	92	180	133

Flange style
Double shaft: CRA1FW

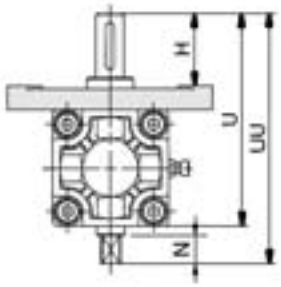

Note) Other dimensions are the same as the single shaft.

Model	H	N	U	UU
CRA1FW□50	39	15	114	134
CRA1FW□63	45	17	136	158
CRA1FW□80	55	20	165	190
CRA1FW□100	60	25	190	220

Flange style
Single shaft with four chamfers: CRA1FX

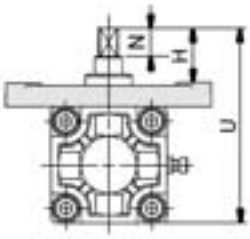

Note) Other dimensions are the same as the single shaft.

Model	H	N	U
CRA1FX□50	30	15	105
CRA1FX□63	33	17	124
CRA1FX□80	43	20	153
CRA1FX□100	44	25	174

Flange style
Double shaft key: CRA1FY

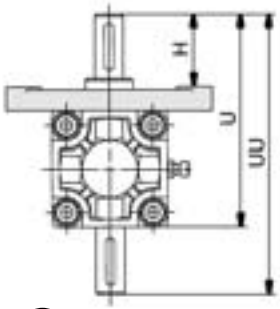

Note) Other dimensions are the same as the single shaft.

Model	H	U	UU
CRA1FY□50	39	114	150
CRA1FY□63	45	136	177
CRA1FY□80	55	165	215
CRA1FY□100	60	190	250

Flange style
Double shaft with four chamfers: CRA1FZ

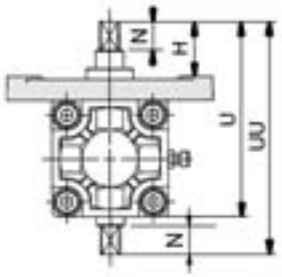

Note) Other dimensions are the same as the single shaft.

Model	H	N	U	UU
CRA1FZ□50	30	15	105	125
CRA1FZ□63	33	17	124	146
CRA1FZ□80	43	20	153	178
CRA1FZ□100	44	25	174	204

Note) The dimensions of shaft key and four chamfers are the same as standard.

Size 50, 63, 80, 100/Foot Style: CDRA1L, Flange Style: CDRA1F

With auto switch
Foot style: CDRA1L□

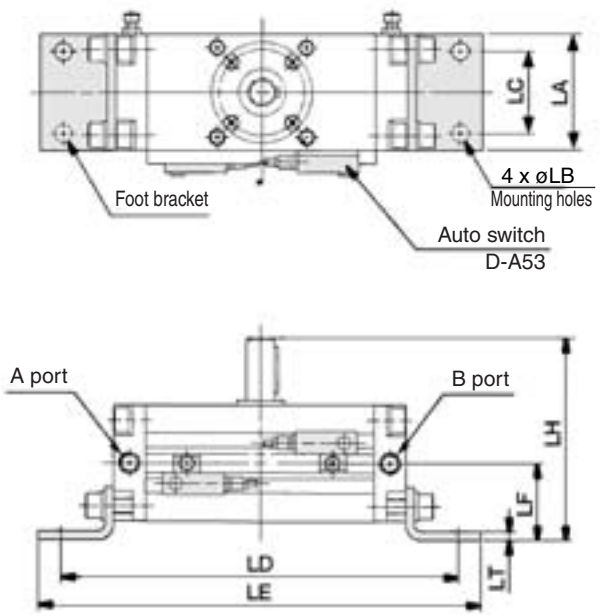

⋆ Dimensions above show pressurization to B port.
∗ ( ) are the dimensions for rotation of 180° and 190°.

Model	LA	LB	LC	LD	LE	LF	LH	LT
CDRA1L□□50	62	9	44	212 (245)	236 (269)	41	108	4.5
CDRA1L□□63	76	11	55	247 (285.5)	275 (313.5)	48	127	5
CDRA1L□□80	92	13	67	287 (331)	329 (373)	58	154	6
CDRA1L□□100	112	13	87	347 (413)	389 (455)	73.5	189.5	6

Flange style
Single shaft: CRA1FS

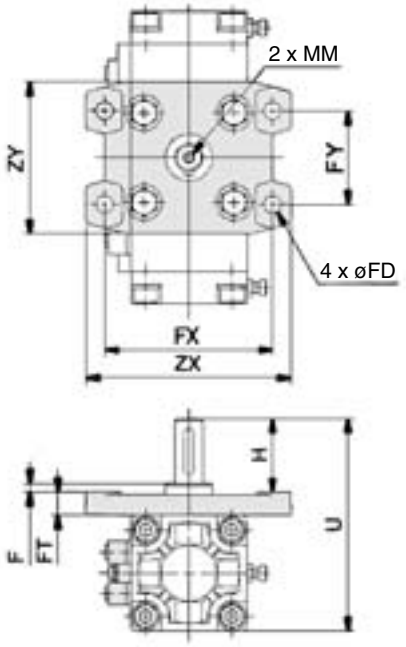

Note) Other dimensions are the same as standard.

Model	F	H	MM	U	FD	FT	FX	FY	ZX	ZY
CDRA1F□□50	4	39	M6 x 1.0 depth 12	114	9	13	90	50	110	81
CDRA1F□□63	5	45	M6 x 1.0 depth 12	136	11.5	15	105	59	130	101
CDRA1F□□80	5	55	M8 x 1.25 depth 16	165	13.5	18	130	76	160	119
CDRA1F□□100	5	60	M10 x 1.5 depth 20	190	13.5	18	150	92	180	133

Flange style
Double shaft: CDRA1FW

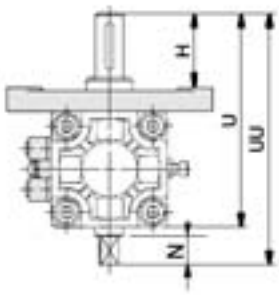

Note) Other dimensions are the same as the single shaft.

Model	H	N	U	UU
CDRA1FW□50	39	15	114	134
CDRA1FW□63	45	17	136	158
CDRA1FW□80	55	20	165	190
CDRA1FW□100	60	25	190	220

Flange style
Single shaft with four chamfers: CDRA1FX

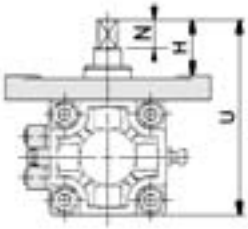

Note) Other dimensions are the same as the single shaft.

Model	H	N	U
CDRA1FX□50	30	15	105
CDRA1FX□63	33	17	124
CDRA1FX□80	43	20	153
CDRA1FX□100	44	25	174

Flange style
Double shaft key: CDRA1FY

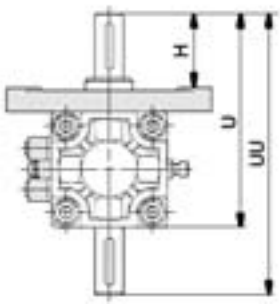

Note) Other dimensions are the same as the single shaft.

Model	H	U	UU
CDRA1FY□50	39	114	150
CDRA1FY□63	45	136	177
CDRA1FY□80	55	165	215
CDRA1FY□100	60	190	250

Flange style
Double shaft with four chamfers: CDRA1FZ

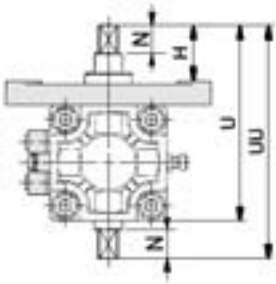

Note) Other dimensions are the same as the single shaft.

Model	H	N	U	UU
CDRA1FZ□50	30	15	105	125
CDRA1FZ□63	33	17	124	146
CDRA1FZ□80	43	20	153	178
CDRA1FZ□100	44	25	174	204

Note) The dimensions of shaft key and four chamfers are the same as standard.

Rotary Actuator with Solenoid Valve

Series CVRA1

Rack & Pinion Style/Size: 50, 63, 80, 100

How to Order

Electrical entry

G	Grommet (Lead wire: 300 mm)	
H	Grommet (Lead wire: 600 mm)	
E	Grommet terminal	
T	Conduit terminal	
D	DIN terminal	
L	L plug connector	With lead wire
LN		Without lead wire
LO		Without connector
M	M plug connector	With lead wire
MN		Without lead wire
MO		Without connector

Light/Surge voltage suppressor

Nil	None
Z *	With light/surge voltage suppressor
S *	With surge voltage suppressor

* Light attached type (Z) is not available for grommet type. Surge voltage suppressor attached type is available only for grommet type.

Rated voltage

1	100 VAC 50/60 Hz
2	200 VAC 50/60 Hz
3	110 to 120 VAC, 50/60 Hz
4	220 VAC, 50/60 Hz
5	24 VDC
6	12 VDC
7	240 VAC, 50/60 Hz
9	Other

Solenoid valve configuration

1	Single solenoid
2	Double solenoid
3	Closed center
4	Exhaust center
5	Pressure center

Manual override

Nil	None
B	Locking B type
C	Locking C type

Made to Order
Refer to page 209 for details.

Without auto switch

CVRA1 [B] [W] [ ] [ ] 50 – 90 [ ] – 1 1 [G] [ ] – [ ] [ ]

With auto switch

CDVRA1 [B] [S] [ ] [ ] 50 – 90 [ ] – 1 1 [G] [ ] – [ ] – [J59W] [ ] – [ ]

Built-in magnet

With solenoid valve

Mounting style

B	Basic style
L *	Foot style

Note) No flange style "F" is available.

Shaft type

Standard	S	Single shaft
	W	Double shaft
Option	X	Single shaft with four chamfers
	Y	Double shaft key
	Z	Double shaft with four chamfers

* Refer to page 196 for the rod-end shape variations.

Type

Nil	Standard
U	Angle adjustable

Size

50
63
80
100

Pattern

Nil	Standard
P	Combination of Simple specials/Made to Order

* Refer to pages 222 to 242 for details.

Rotating angle

Standard	90	90°
	180	180°
Option	100	100°
	190	190°

Air cushion

Nil	None
C *	With air cushion

* Except angle adjustable type "U".

Number of auto switches

S	1 pc.
Nil	2 pcs.

Note) Maximum number of auto switches mountable is two.

Auto switch

* For the applicable auto switch model, refer to the table below.

Applicable Auto Switch/Refer to pages 761 to 809 for further information on auto switches.

Type	Special function	Electrical entry	Indicator light	Wiring (Output)	Load voltage DC		Load voltage AC	Auto switch model	Lead wire length * (m) 0.5 (Nil)	3 (L)	5 (Z)	Pre-wired connector	Applicable load	
Solid state switch	—	Grommet	Yes	3-wire (NPN)	24V	5V, 12V	—	F59	●	●	○	○	IC circuit	Relay, PLC
				3-wire (PNP)				F5P	●	●	○	○		
				2-wire		12V		J59	●	●	○	○	—	
					—	—	100V, 200V	J51	●	●	○	—		
	Diagnosis indication (2-color)			3-wire (NPN)	24V	5V, 12V	—	F59W	●	●	○	○	IC circuit	
				3-wire (PNP)				F5PW	●	●	○	○		
				2-wire		12V		J59W	●	●	○	○	—	
	Diagnosis output (2-color)			4-wire (NPN)		5V, 12V		F59F	●	●	○	○	IC circuit	
Reed switch	—	Grommet	Yes	3-wire (NPN equiv.)	—	5V	—	A56	●	●	—	—	IC circuit	—
				2-wire	24V	12V	—	A53	●	●	●	—	—	Relay, PLC
						—	100V, 200V	A54	●	●	●	—		
			No			12V	200 V or less	A64	●	●	—	—		
							—	A67	●	●	—	—	IC circuit	PLC
	Diagnosis indication (2-color)		Yes			—	—	A59W	●	●	—	—	—	Relay,PLC

* Lead wire length symbols: 0.5 m ····· Nil (Example) A53
3 m ····· L (Example) A53L
5 m ····· Z (Example) A53Z

* Refer to page 199 for applicable switches other than those indicated above.
* Auto switches are shipped together, (but not assembled).

* Auto switches marked with "○" are made-to-order specifications.

Refer to pages 796 and 797 for detailed solid state auto switches with pre-wired connectors.

Made to Order
(Refer to pages 222 to 242 for details.)

Symbol	Specifications/Description	Applicable shaft type
—	Shaft type variations	S,X,Y,Z,T,J,K
XA1 to XA24	Shaft pattern sequencing I	S,W,Y
XA33 to XA46	Shaft pattern sequencing II	X,Z,T,J,K
XC7	Reversed shaft	S,W,X,T,J
XC8 to XC11	Change of rotation range	S,W,Y
XC30	Fluorine grease	S,W,X,Y,Z,T,J,K
XC31 to XC36	Change of rotation range and rotation direction of shaft	S,W,Y
XC37 to XC46	Change of rotation range and angle adjusting direction	S,W,Y
XC47 to XC58	Change of rotation range and angle adjusting direction (Angle adjusting screw is equipped on the left.)	S,W,Y
X6	Stainless steel specifications for main parts	S,W,X,Y,Z,T,J,K
X10	Both sides angle adjustable type	S,W,X,Y,Z,T,J,K
X11	One side angle adjustable, One side cushion	S,W,X,Y,Z,T,J,K

⚠Precautions

Be sure to read before handling. Refer to front matters 38 and 39 for Safety Instructions and pages 4 to 13 for Rotary Actuator and Auto Switch Precautions.

Rotation Range of Keyway Solenoid Valve Mounting Positions

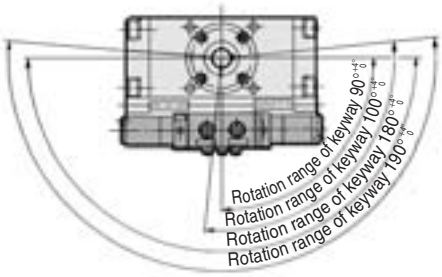

Light/Surge Voltage Suppressor

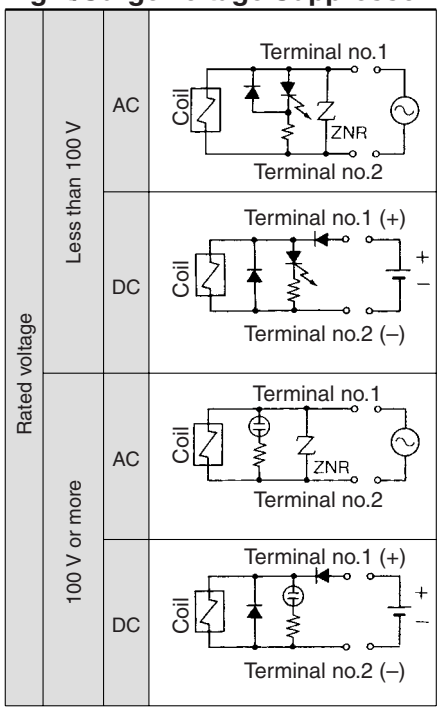

Note) Light is not available on grommet type.

Specifications

Fluid			Air (Non-lube)
Proof pressure			1.35 MPa
Max. operating pressure			0.9 MPa
Min. operating pressure			0.15 MPa
Ambient and fluid temperature			0°C to 50°C (No freezing)
Lubrication			Non-lube
Mounting			Basic style, Foot style
Electrical entry			Grommet, Grommet terminal, Conduit terminal, DIN terminal, L plug connector, M plug connector
Coil rated voltage	AC		100, 200 V (50/60 Hz)
	DC		24 V
Allowable voltage change			–15 to +10% of the rated voltage
Coil insulation			Equivalent to B class (130°C)
Apparent power	AC	Inrush	5.6 VA (50 Hz), 5.0 VA (60 Hz)
		Holding	3.4 VA (50 Hz), 2.3 VA (60 Hz)
Power consumption	DC		1.8 W

Mass
(kg)

Model	Additional mass	No. of positions/solenoids				
		2 position single	2 position double	3 position closed center	3 position exhaust center	3 position pressure center
CVRA1□□50 to 100	0.2	0.2	0.3	0.4	0.4	0.4

How to calculate mass
Mass = Basic mass * + Add'l mass + No. of positions/solenoids
* Refer to page 194 for basic mass.

Manual Override

Non-locking push style is standard.

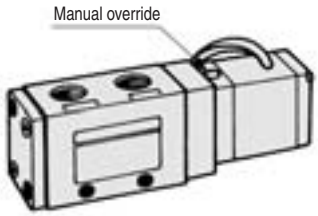

Electrical Wiring

The DIN terminal and the terminal pin (with light/surge voltage suppressor) are connected internally as shown below. Therefore, connect them the respective power supply terminals.

DIN terminal **With terminal block**

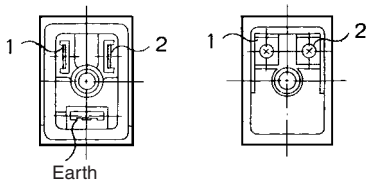

Terminal no.	1	2
DIN connector	+	–
Terminal connector	+	–

Instant Energizing Time

To operate the double solenoid type by applying an instantaneous current, ensure that the current is applied for at least 0.1 second.

How to Adjust the Rotation Speed

Rotation direction
When current is applied to SOL1, the shaft rotates clockwise.

How to adjust the rotation speed:
Turn the needle valve of the throttle valve clockwise to reduce the exhaust flow volume, thus slowing the rotation speed.
Throttle valve A regulates the clockwise rotation speed of the shaft and throttle valve B regulates the counterclockwise speed to the shaft.

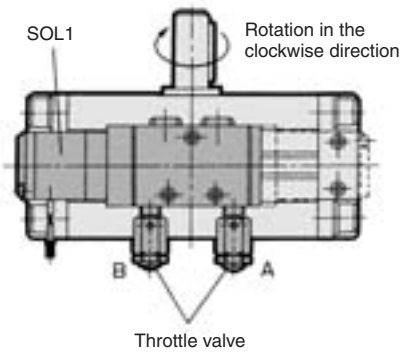

Construction

With solenoid valve

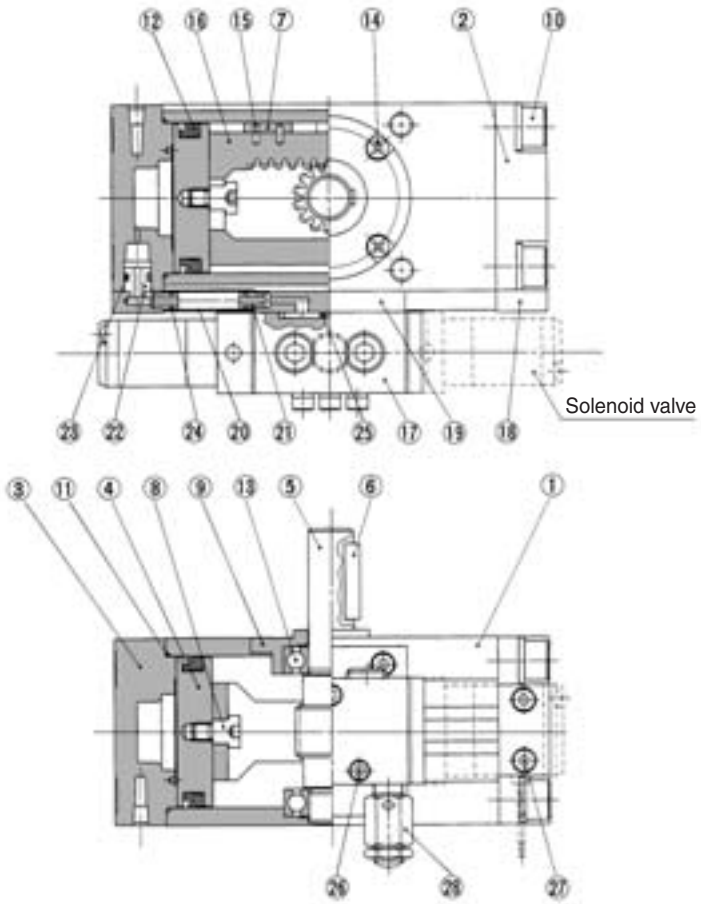

With solenoid valve and auto switch

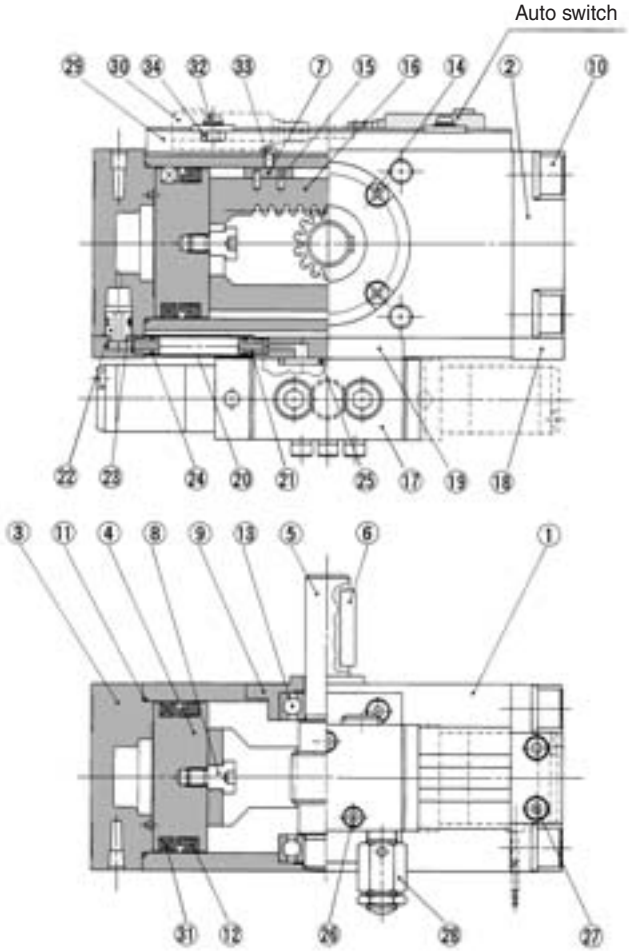

Component Parts

No.	Description	Material	Note
1	**Body**	Aluminum alloy	Anodized
2	**Right cover**	Aluminum alloy	Anodized
3	**Left cover**	Aluminum alloy	Anodized
4	**Piston**	Aluminum alloy	Chromated
5	**Shaft**	Chrome molybdenum steel	
6	**Parallel key**	Carbon steel	
7	**Slider**	Resin	
8	**Connecting screw**	Carbon steel	Zinc chromated
9	**Bearing retainer**	Aluminum alloy	Anodized
10	**Hexagon socket head cap screw with spring washer**	Chromium molybdenum steel	Black zinc chromated
11	**Tube gasket**	NBR	
12	**Piston seal**	NBR	
13	**Bearing**	Bearing steel	
14	**Round head Phillips screw**	Steel wire	Black zinc chromated
15	**Spring pin**	Steel wire	
16	**Rack**	Carbon steel	
17	**Solenoid valve**		

No.	Description	Material	Note
18	**Sub-plate**	Aluminum alloy	Anodized
19	**Sub-plate**	Aluminum alloy	Anodized
20	**Pipe**	Stainless steel	
21	**Fitting**	Aluminum alloy	Chromated
22	**Fitting**	Aluminum alloy	Chromated
23	**O-ring**	NBR	
24	**O-ring**	NBR	
25	**O-ring**	NBR	
26	**Hexagon socket head cap screw**	Steel wire	Black dyed
27	**Hexagon socket head cap screw**	Steel wire	Black dyed
28	**Metal valve**	Brass	Nickel plated
29	**Switch mounting rail**	Aluminum alloy	
30	**Auto switch**		
31	**Plastic magnet**	Magnetic material	
32	**Round head Phillips screw**	Steel wire	Nickel plated
33	**Round head Phillips screw**	Steel wire	Nickel plated
34	**Hexagon nut**	Steel wire	Nickel plated

With Solenoid Valve, With Solenoid Valve and Auto Switch/Replacement Parts

Type	Model	Description (The parts shown below are sets.)
C□VRA1□□50	P294020-49A	⑦, Slider : 2 pcs. ㉓, O-ring : 2 pcs. ⑪, Tube gasket : 2 pcs. ㉔, O-ring : 4 pcs. ⑫, Piston seal : 2 pcs. ㉕, O-ring : 2 pcs. ⑮, Spring pin : 4 pcs.
C□VRA1□□63	P294030-49A	
C□VRA1□□80	P294040-49	
C□VRA1□□100	P294050-49A	

A grease pack (10 g) is included. If an additional grease pack is needed, order with the following part number.
Grease pack part no.: GR-S-010 (10 g)

Size 50, 63, 80, 100/Basic Style: CVRA1BS50 to 100

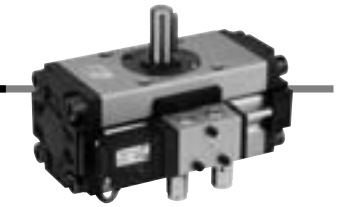

Single shaft type: CVRA1BS□50 to 100

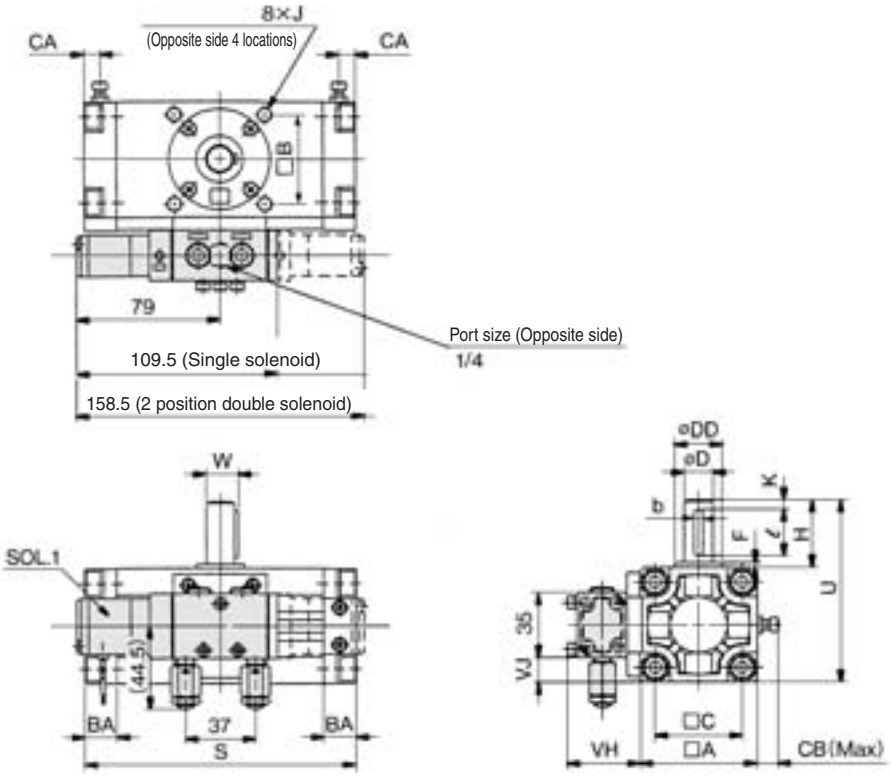

Double shaft type: CVRA1BW□

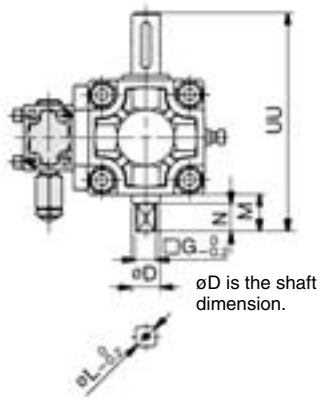

Double Shaft Type

(mm)

Model	D(g6)	G	M	N	UU	L
CVRA1BW□50	15	11	20	15	118	14
CVRA1BW□63	17	13	22	17	139	16
CVRA1BW□80	20	15	25	20	167	19
CVRA1BW□100	25	19	30	25	202	24

Single Shaft Type

(mm)

Model	A	B	BA	C	CA	CB	D (g6)	DD (h9)	F	H	J	K	S *	U	W	Valve dimensions		Key dimensions	
																VH	VJ	b	ℓ
CVRA1BS□50	62	48	17	46	8.5	13	15	25	2.5	36	M8 x 1.25 depth 8	5	144 (177)	98	17	39	13.5	$5^{0}_{-0.030}$	25
CVRA1BS□63	76	60	20	57	10	14	17	30	2.5	41	M10 x 1.5 depth 12	5	163 (201.5)	117	19.5	39	20.5	$6^{0}_{-0.030}$	30
CVRA1BS□80	92	72	23.5	70	12	18	20	35	3	50	M12 x 1.75 depth 13	5	186 (230)	142	22.5	43	28.5	$6^{0}_{-0.030}$	40
CVRA1BS□100	112	85	25	85	12.5	18	25	40	4	60	M12 x 1.75 depth 14	5	245 (311)	172	28	43	38.5	$8^{0}_{-0.036}$	45

* ( ) are the dimensions for rotation of 180° and 190°.

Port Size

Model	Port size
CVRA1BS□50	Rc 1/4
CVRA1BS□63	Rc 1/4
CVRA1BS□80	Rc 1/4
CVRA1BS□100	Rc 1/4

Size 50, 63, 80, 100/Basic Style: CVRA1B, Foot Style: CVRA1L

Single shaft with four chamfers: CVRA1BX□

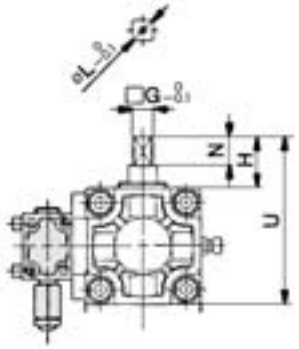

(mm)

Model	G	H	L	N	U
CVRA1BX□50	11	27	14	15	89
CVRA1BX□63	13	29	16	17	105
CVRA1BX□80	15	38	19	20	130
CVRA1BX□100	19	44	24	25	156

Note) Other dimensions are the same as the single shaft.

Double shaft key: CVRA1BY□

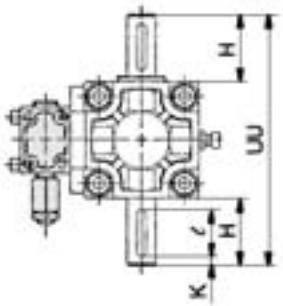

(mm)

Model	ℓ	H	K	UU
CVRA1BY□50	25	36	5	134
CVRA1BY□63	30	41	5	158
CVRA1BY□80	40	50	5	192
CVRA1BY□100	45	60	5	232

Note) Other dimensions are the same as the single shaft.

Double shaft with four chamfers: CVRA1BZ□

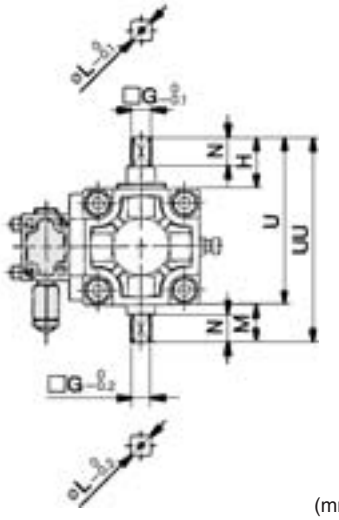

(mm)

Model	G	H	L	M	N	U	UU
CVRA1BZ□50	11	27	14	20	15	89	109
CVRA1BZ□63	13	29	16	22	17	105	127
CVRA1BZ□80	15	38	19	25	20	130	155
CVRA1BZ□100	19	44	24	30	25	156	186

Note) Other dimensions are the same as the single shaft.

Foot style: CVRA1L□□

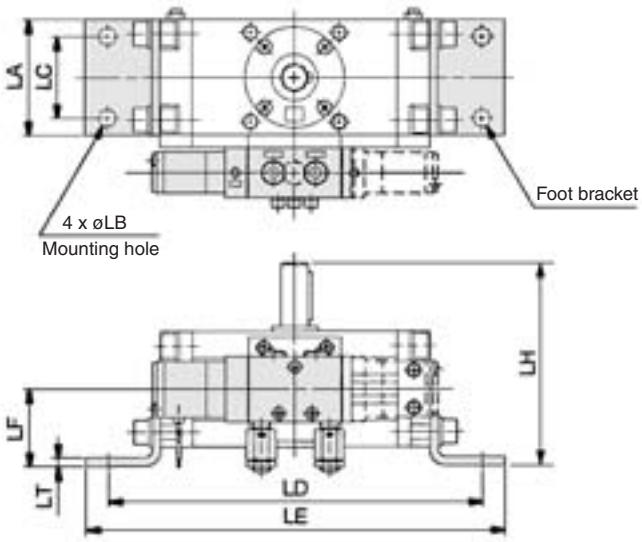

⋆ The dimensions below show pressurization to B port. (mm)

Model	LA	LB	LC	LD	LE	LF	LH	LT
CVRA1L□□50	62	9	44	200 (233)	224 (257)	41	108	4.5
CVRA1L□□63	76	11	55	235 (273.5)	263 (301.5)	48	127	5
CVRA1L□□80	92	13	67	274 (318)	316 (360)	58	154	6
CVRA1L□□100	112	13	87	333 (399)	375 (441)	73.5	189.5	6

∗ ( ) are the dimensions for rotation of 180° and 190°.
Note) Other dimensions are the same as the single shaft.

Size 50, 63, 80, 100/Basic Style: CDVRA1BS50 to 100

Single shaft type: CDVRA1BS□50 to 100

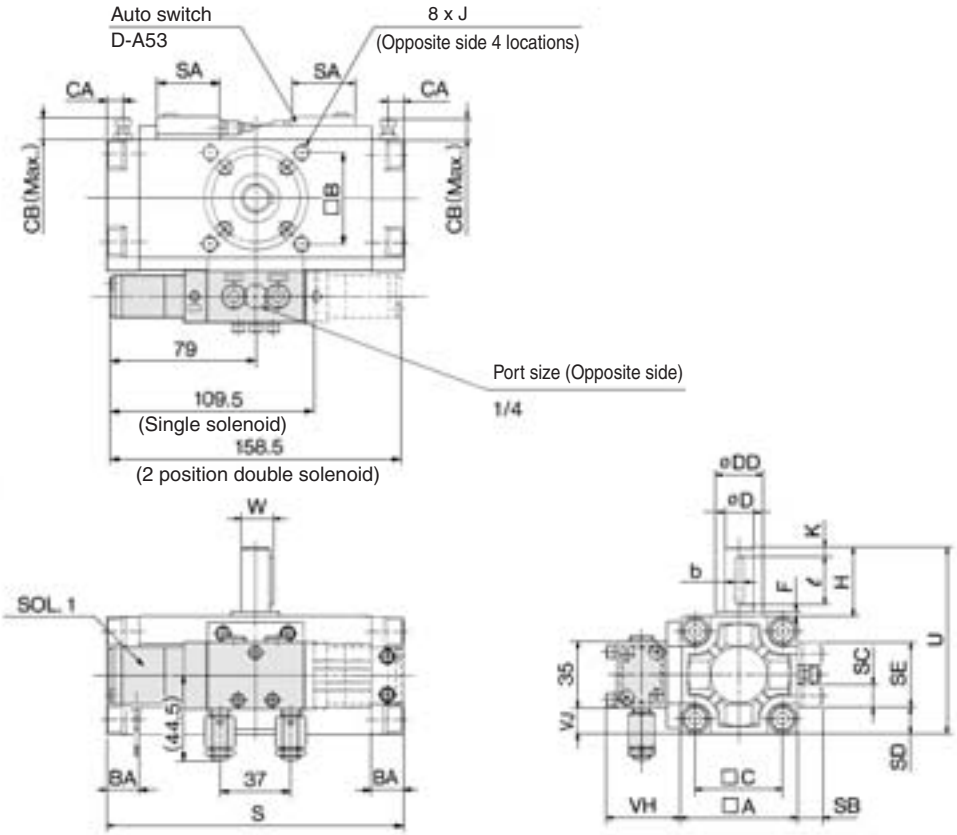

Double shaft type: CDVRA1BW□

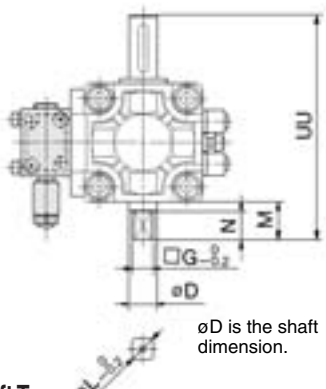

Double Shaft Type

(mm)

Model	D (g6)	G	M	N	UU	øL
CDVRA1BW□50	15	11	20	15	118	14
CDVRA1BW□63	17	13	22	17	139	16
CDVRA1BW□80	20	15	25	20	167	19
CDVRA1BW□100	25	19	30	25	202	24

Single Shaft Type

(mm)

Model	A	B	BA	C	CA	CB	øD (g6)	øDD (h9)	F	H	J	K	S	U	W	SA	SB	SC	SD	SE	Valve dimensions VH	Valve dimensions VJ	Key dimensions b	Key dimensions ℓ
CDVRA1BS□50	62	48	17	46	8.5	13	15	25	2.5	36	M 8 x 1.25 Depth 8	5	156 (189)	98	17	33	13.5	12	14	34	39	13.5	$5^{0}_{-0.030}$	25
CDVRA1BS□63	76	60	20	57	10	14	17	30	2.5	41	M10 x 1.5 Depth 12	5	175 (213.5)	117	19.5	33	14.5	12	21	34	39	20.5	$6^{0}_{-0.030}$	30
CDVRA1BS□80	92	72	23.5	70	12	18	20	35	3	50	M12 x 1.75 Depth 13	5	199 (243)	142	22.5	33	15.5	12	29	34	43	28.5	$6^{0}_{-0.030}$	40
CDVRA1BS□100	112	85	25	85	12.5	18	25	40	4	60	M12 x 1.75 Depth 14	5	259 (325)	172	28	33	16	12	39	34	43	38.5	$8^{0}_{-0.036}$	45

∗ ( ) are the dimensions for rotation of 180° and 190°.

Foot style: CDVRA1L□□

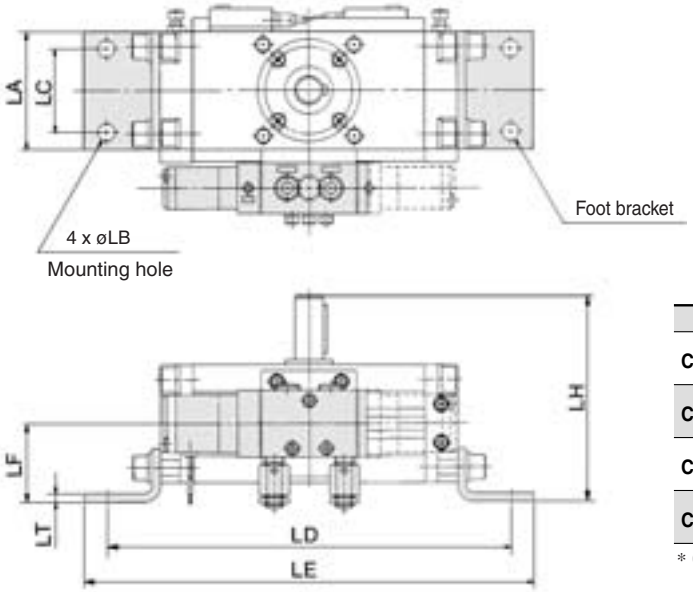

(mm)

Model	LA	LB	LC	LD	LE	LF	LH	LT
CDVRA1L□□50	62	9	44	212 (245)	236 (269)	41	108	4.5
CDVRA1L□□63	76	11	55	247 (285.5)	275 (313.5)	48	127	5
CDVRA1L□□80	92	13	67	287 (331)	329 (373)	58	154	6
CDVRA1L□□100	112	13	87	347 (413)	389 (455)	73.5	189.5	6

∗ ( ) are the dimensions for rotation of 180° and 190°.

Rotary Actuator: Angle Adjustable Type

∗ Angle adjustment mechanism is provided as standard.

Series CRA1□□U

Rack & Pinion Style/Size: 50, 63, 80, 100

How to Order

Without auto switch: CRA1 B W U □ 50 – 90 ——— □

With auto switch: CDRA1 B S U □ 50 – 90 – J59W □ – □

Built-in magnet

Mounting style

B	Basic style
L∗	Foot style
F	Flange style

∗ Refer to the table below for the part numbers of foot bracket.

Shaft type

Standard	S	Single shaft
	W	Double shaft
Option	X	Single shaft with four chamfers
	Y	Double shaft key
	Z	Double shaft with four chamfers

∗ Refer to page 196 for the rod-end shape variations.

Angle adjustable type

Pattern

Nil	Standard
P	Combination of Simple specials/Made to Order

∗ Refer to pages 222 to 242 for details.

Size

50
63
80
100

Rotating angle

Standard	90	90°
	180	180°
Option	100	100°
	190	190°

Number of auto switches

S	1 pc.
Nil	2 pcs.

Note) Maximum number of auto switches mountable is two.

Auto switch

∗ For the applicable auto switch model, refer to the table below.

Made to Order or port type

Refer to page 215 for Made to Order.

Nil	Rc
XF ∗	G
XN ∗	NPT

∗ These cannot be combined with Made to Order.
∗ Except the air-hydro type.

Applicable Auto Switch/Refer to pages 761 to 809 for further information on auto switches.

Type	Special function	Electrical entry	Indicator light	Wiring (Output)	Load voltage DC		Load voltage AC	Auto switch model	Lead wire ∗ length (m) 0.5 (Nil)	3 (L)	5 (Z)	Pre-wired connector	Applicable load	
Solid state switch	—	Grommet	Yes	3-wire (NPN)	24V	5V, 12V	—	F59	●	●	○	○	IC circuit	Relay, PLC
				3-wire (PNP)				F5P	●	●	○	○		
				2-wire		12V		J59	●	●	○	○	—	
					—	—	100V, 200V	J51	●	●	○	—		
	Diagnosis indication (2-color)			3-wire (NPN)	24V	5V, 12V	—	F59W	●	●	○	○	IC circuit	
				3-wire (PNP)				F5PW	●	●	○	○		
				2-wire		12V		J59W	●	●	○	○	—	
	Water resistant (2-color)							F5BA ∗∗	—	●	○	○		
	Diagnosis output (2-color)			4-wire (NPN)		5V, 12V		F59F	●	●	○	○	IC circuit	
Reed switch	—	Grommet	Yes	3-wire (NPN equiv.)	—	5V	—	A56	●	●	—	—	IC circuit	—
				2-wire	24V	12V	—	A53	●	●	●	—	—	Relay, PLC
						—	100V, 200V	A54	●	●	●	—		
			No			12V	200 V or less	A64	●	●	—	—		
							—	A67	●	●	—	—	IC circuit	PLC
	Diagnosis indication (2-color)		Yes			—	—	A59W	●	●	—	—	—	Relay, PLC

∗∗ Although it is possible to mount water resistant type auto switches, note that the rotary actuator itself is not of water resistant construction.
∗ Lead wire length symbols: 0.5 m ····· Nil (Example) A53
3 m ····· L (Example) A53L
5 m ····· Z (Example) A53Z
∗ Refer to page 199 for applicable switches other than those indicated above.
∗ Auto switches are shipped together, (but not assembled).
∗ Auto switches marked with "○" are made to order specifications.

Refer to pages 796 and 797 for detailed solid state auto switches with pre-wired connectors.

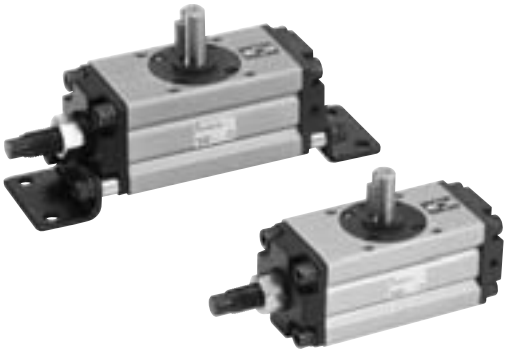

Specifications

Fluid	Air (Non-lube)
Cushion	None
Mounting	Basic style, Foot style, Flange style
Angle adjustable range	0° to 90°
Backlash	Within 1°

Mass

(kg)

Model	Standard mass		Additional mass (Angle adjustable)
	90°	180°	
CRA1□□U50	1.5	1.7	0.5
CRA1□□U63	2.5	3.0	0.8
CRA1□□U80	4.3	5.0	1.5
CRA1□□U100	8.5	9.5	2.0

Made to Order

Made to Order
(Refer to pages 222 to 242 for details.)

Symbol	Specifications/Description	Applicable shaft type
—	Shaft type variations	S,X,Y,Z,T,J,K
XA1 to XA24	Shaft pattern sequencing I	S,W,Y
XA33 to XA46	Shaft pattern sequencing II	X,Z,T,J,K
XC7	Reversed shaft Change of rotation range	S,W,X,T,J
XC30	Fluorine grease	S,W,X,Y,Z,T,J,K
XC37 to XC46	Change of rotation range and angle adjusting direction	S,W,Y
XC47 to XC58	Change of rotation range and angle adjusting direction (Angle adjusting screw is equipped on the left.)	S,W,Y
XC59 to XC61	Change of port direction	S,W,X,Y,Z,T,J,K
XC62	Reversed auto switch mounting	S,W,X,Y,Z,T,J,K
X7 *	Heat resistant type (100°C)	S,W,X,Y,Z,T,J,K
X10	Both sides angle adjustable type	S,W,X,Y,Z,T,J,K
X11	One side angle adjustable, One side cushion	S,W,X,Y,Z,T,J,K
X16	Fluororubber seal	S,W,X,Y,Z,T,J,K

* X7: Not available for the built-in magnet type.

Rotation Range of Keyway

Adjusting direction is in the direction the arrows show.
Adjusting angle at 90° at maximum.
90° type: 90° to 0°, 180° type: 180° to 90°

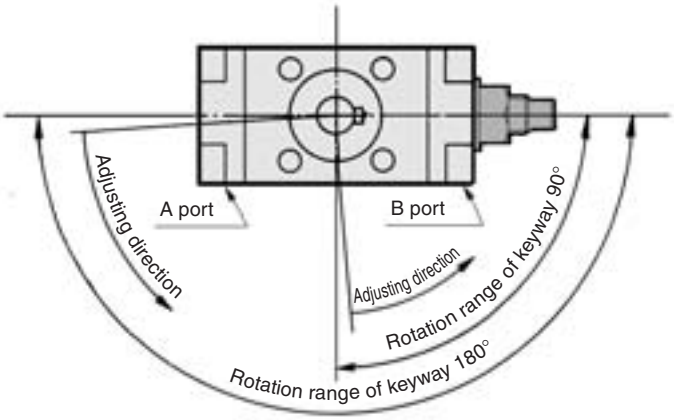

How to Adjust Angle

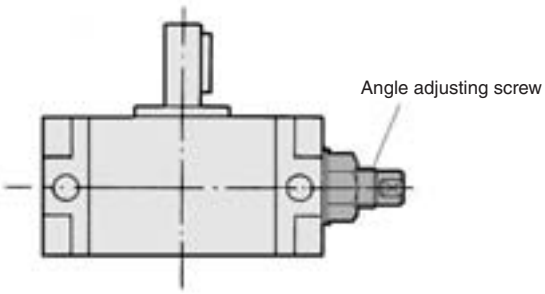

Rotation angle becomes smaller by tightening the angle adjusting screw to the right.

Adjusting Angle per One Rotation of Angle Adjusting Screw

Size	50	63	80	100
Adjusting angle	8.2°	7.0°	6.1°	4.1°

Foot Bracket Part No.

Size	Foot	Description	Mounting screws included in foot bracket
50	P294020-25	Foot bracket : 2 pcs.	M 8 x 1.25 x 35
63	P294030-25	Mounting thread : 4 pcs.	M10 x 1.5 x 40
80	P294040-25	Collar * : 4 pcs.	M12 x 1.75 x 50
100	P294050-25		M12 x 1.75 x 50

Note) Part no. in the table includes mounting screw.

Construction

Standard: CRA1□□U

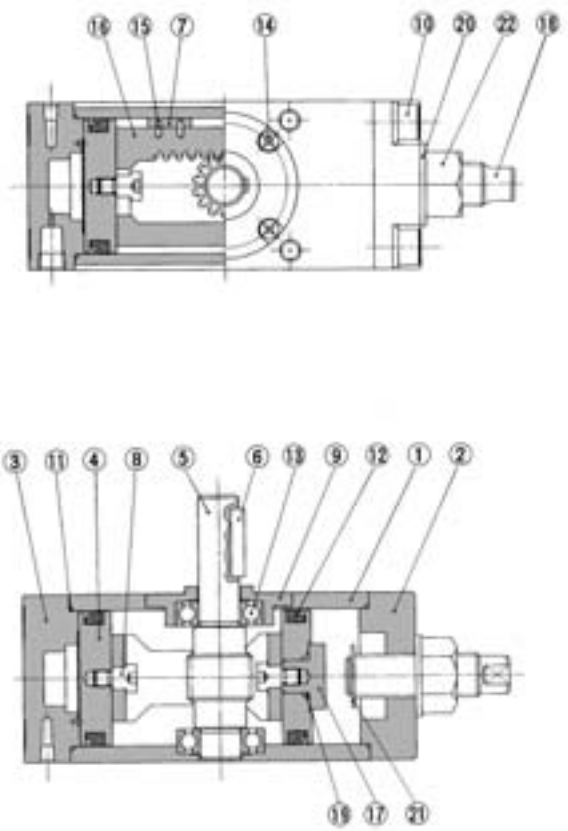

With auto switch: CDRA1□□U

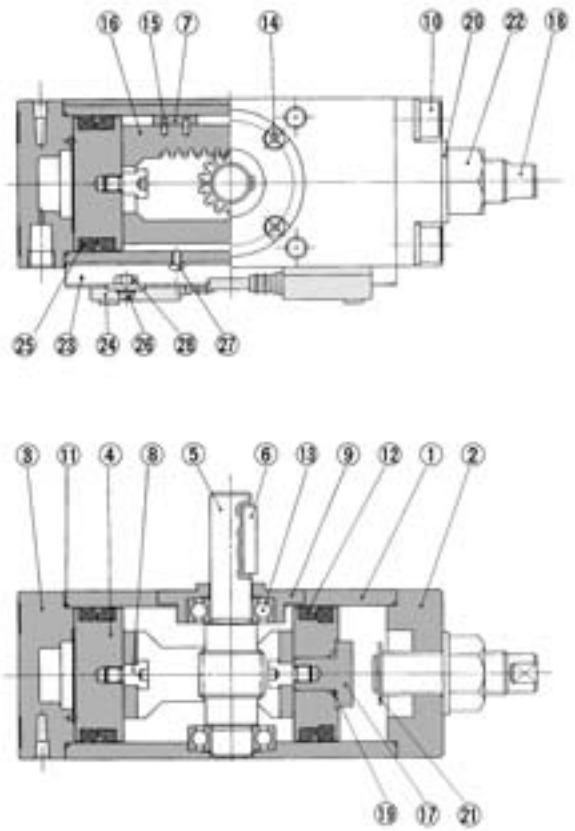

Component Parts

No.	Description	Material	Note
①	**Body**	Aluminum alloy	Anodized
②	**Right cover**	Carbon steel	Black zinc chromated
③	**Left cover**	Aluminum alloy	Anodized
④	**Piston**	Aluminum alloy	Chromated
⑤	**Shaft**	Chrome molybdenum steel	
⑥	**Parallel key**	Carbon steel	
⑦	**Slider**	Resin	
⑧	**Connecting screw**	Carbon steel	Zinc chromated
⑨	**Bearing retainer**	Aluminum alloy	Anodized
⑩	**Hexagon socket head cap screw with spring washer**	Chrome molybdenum steel	Black zinc chromated
⑪	**Tube gasket**	NBR	
⑫	**Piston seal**	NBR	
⑬	**Bearing**	Bearing steel	
⑭	**Round head Phillips screw**	Steel wire	Black zinc chromated

No.	Description	Material	Note
⑮	**Spring pin**	Steel wire	
⑯	**Rack**	Carbon steel	Zinc chromated
⑰	**Stopper**	Carbon steel	Black zinc chromated
⑱	**Stopper screw**	Carbon steel	
⑲	**O-ring**	NBR	
⑳	**Seal washer**	NBR	Chromated
㉑	**Type E retaining ring**	Steel wire	Nickel plated
㉒	**Hexagon nut**	Steel wire	
㉓	**Switch mounting rail**	Aluminum alloy	
㉔	**Auto switch**		
㉕	**Plastic magnet**	Magnetic material	
㉖	**Round head Phillips screw**	Steel wire	Nickel plated
㉗	**Round head Phillips screw**	Steel wire	Nickel plated
㉘	**Hexagon nut**	Steel wire	Nickel plated

Replacement Parts

Model	Part no.	Description (The parts shown below are set.)
C□RA1□□U50	P294020-22A	⑦ Slider : 2 pcs. ⑪ Tube gasket : 2 pcs. ⑫ Piston seal : 2 pcs. ⑮ Spring pin : 4 pcs. ⑳ Seal washer : 1 pc.
C□RA1□□U63	P294030-22A	
C□RA1□□U80	P294040-22	
C□RA1□□U100	P294050-22A	

A grease pack (10 g) is included. If an additional grease pack is needed, order with the following part number.
Grease pack part no.: GR-S-010 (10 g)

Size 50, 63, 80, 100/Standard: CRA1□□U

* The dimensions below show pressurization to B port.

Single shaft type: CRA1BSU

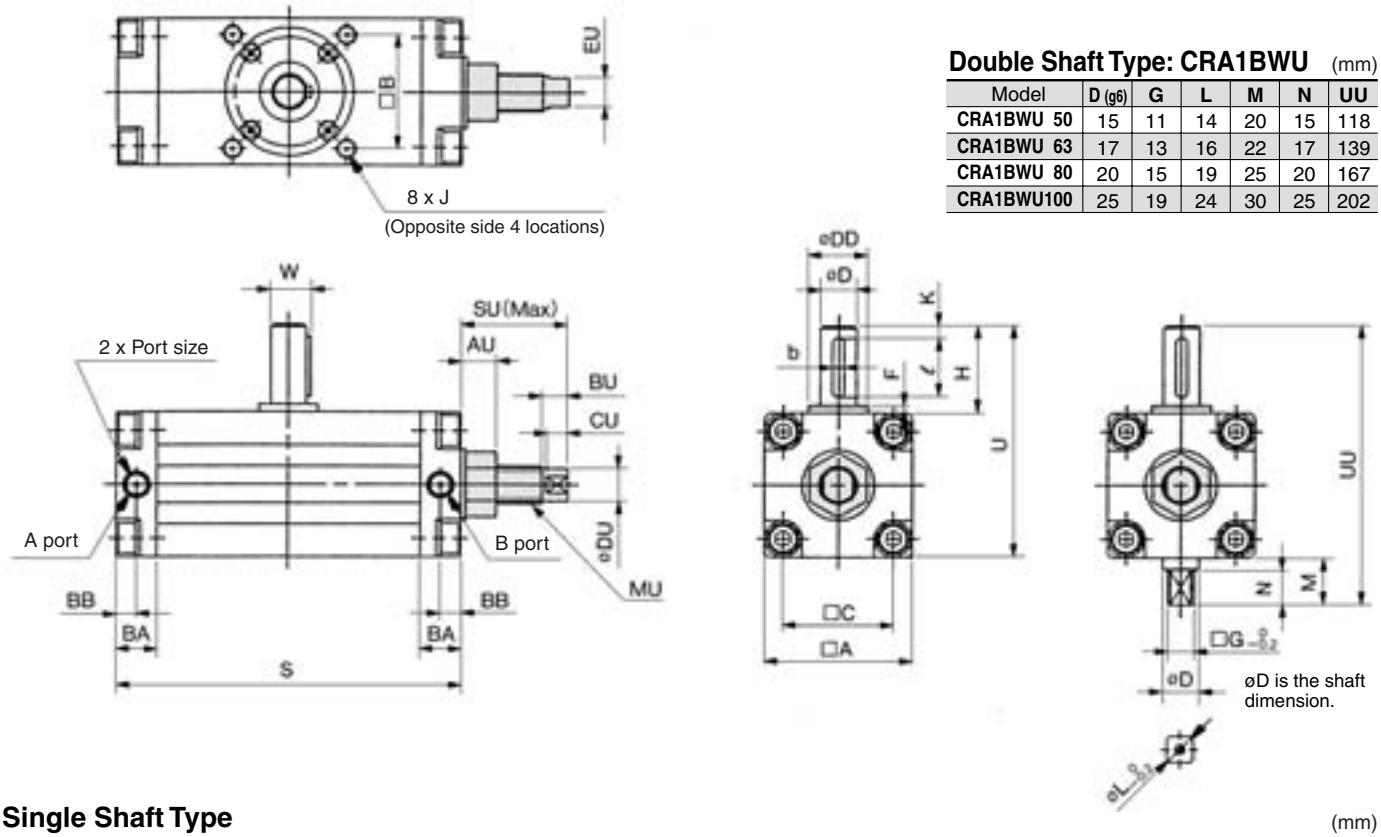

Double Shaft Type: CRA1BWU

(mm)

Model	D (g6)	G	L	M	N	UU
CRA1BWU 50	15	11	14	20	15	118
CRA1BWU 63	17	13	16	22	17	139
CRA1BWU 80	20	15	19	25	20	167
CRA1BWU100	25	19	24	30	25	202

Single Shaft Type

(mm)

Model	Port size *	A	AU	B	BA	BB	BU	C	CU	D (g6)	DD (h9)	DU	EU	F	H	J	K	MU	S	SU	U	W	Key dimensions b	Key dimensions ℓ
CRA1BSU 50	Rc1/8	62	15	48	17	8.5	11	46	9	15	25	14	12	2.5	36	M8 x 1.25 depth 8	5	M16 x 1.5	144 (177)	45	98	17	$5^{0}_{-0.030}$	25
CRA1BSU 63	Rc1/8	76	19	60	20	10	13	57	11	17	30	18	14	2.5	41	M10 x 1.5 depth 12	5	M20 x 1.5	163 (201.5)	54.5	117	19.5	$6^{0}_{-0.030}$	30
CRA1BSU 80	Rc1/4	92	22	72	23.5	12	16	70	13	20	35	22	19	3	50	M12 x 1.75 depth 13	5	M24 x 1.5	186 (230)	62.5	142	22.5	$6^{0}_{-0.030}$	40
CRA1BSU100	Rc3/8	112	22	85	25	12.5	16	85	13	25	40	22	19	4	60	M12 x 1.75 depth 14	5	M24 x 1.5	245 (311)	73.5	172	28	$8^{0}_{-0.036}$	45

* ( ) are the dimensions for rotation of 180° and 190°.
* In addition to Rc, G and NPT are also available.

Size 50, 63, 80, 100

Single shaft with four chamfers: CRA1BXU□

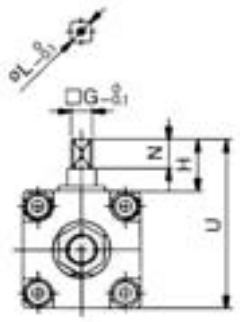

(mm)

Model	G	H	L	N	U
CRA1BXU□50	11	27	14	15	89
CRA1BXU□63	13	29	16	17	105
CRA1BXU□80	15	38	19	20	130
CRA1BXU□100	19	44	24	25	156

Note) Other dimensions are the same as the single shaft.

Double shaft key: CRA1BYU□

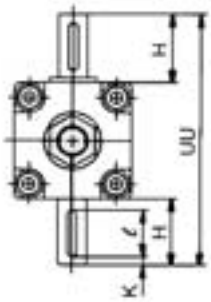

(mm)

Model	ℓ	H	K	UU
CRA1BYU□50	25	36	5	134
CRA1BYU□63	30	41	5	158
CRA1BYU□80	40	50	5	192
CRA1BYU□100	45	60	5	232

Note) Other dimensions are the same as the single shaft.

Double shaft with four chamfers: CRA1BZU□

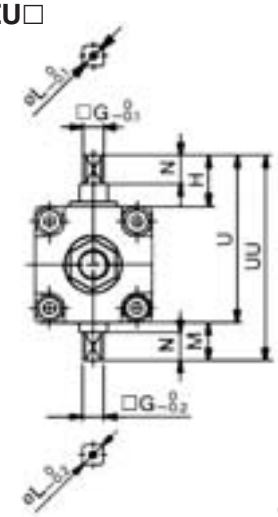

(mm)

Model	G	H	L	M	N	U	UU
CRA1BZU□ 50	11	27	14	20	15	89	109
CRA1BZU□63	13	29	16	22	17	105	127
CRA1BZU□80	15	38	19	25	20	130	155
CRA1BZU□100	19	44	24	30	25	156	186

Note) Other dimensions are the same as the single shaft.

Foot style: CRA1L□U

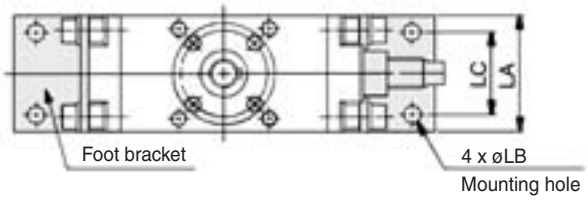

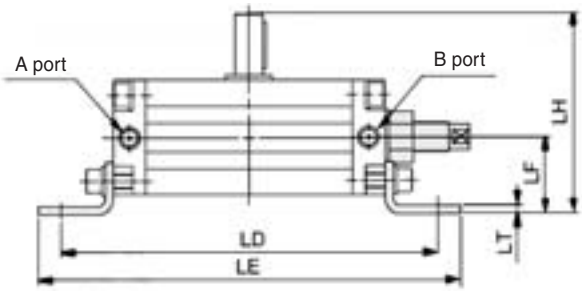

⋆ The dimensions below show pressurization to B port.
∗ ( ) are the dimensions for rotation of 180° and 190°.

(mm)

Model	LA	LB	LC	LD	LE	LF	LH	LT
CRA1L□U50	62	9	44	200 (233)	224 (257)	41	108	4.5
CRA1L□U63	76	11	55	235 (273.5)	263 (301.5)	48	127	5
CRA1L□U80	92	13	67	274 (318)	316 (360)	58	154	6
CRA1L□U100	112	13	87	333 (399)	375 (441)	73.5	189.5	6

Note) Other dimensions are the same as the single shaft.

Size 50, 63, 80, 100

Single shaft flange style: CRA1FSU

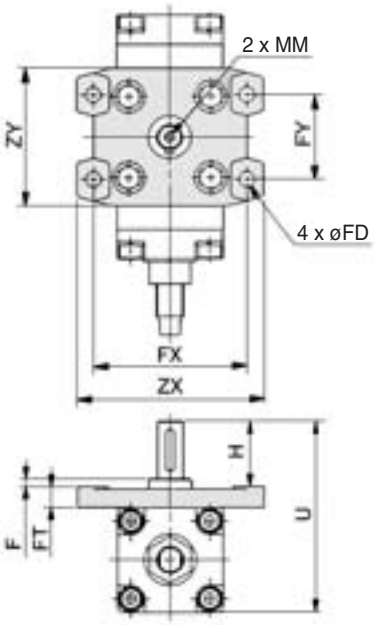

Note) Other dimensions are the same as standard. (mm)

Model	F	FD	FT	FX	FY	H	MM	U	ZX	ZY
CRA1F□U50	4	9	13	90	50	39	M6 x 1.0 depth 12	114	110	81
CRA1F□U63	5	11.5	15	105	59	45	M6 x 1.0 depth 12	136	130	101
CRA1F□U80	5	13.5	18	130	76	55	M8 x 1.25 depth 16	165	160	119
CRA1F□U100	5	13.5	18	150	92	60	M10 x 1.5 depth 20	190	180	133

Flange style Double shaft: CRA1FWU

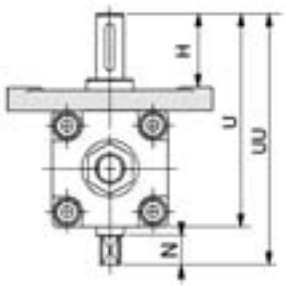

Note) Other dimensions are the same as the single shaft. (mm)

Model	H	N	U	UU
CRA1FWU50	39	15	114	134
CRA1FWU63	45	17	136	158
CRA1FWU80	55	20	165	190
CRA1FWU100	60	25	190	220

Flange style Single shaft with four chamfers: CRA1FXU

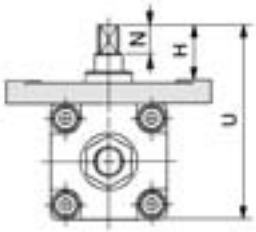

Note) Other dimensions are the same as the single shaft. (mm)

Model	H	N	U
CRA1FXU50	30	15	105
CRA1FXU63	33	17	124
CRA1FXU80	43	20	153
CRA1FXU100	44	25	174

Flange style Double shaft key: CRA1FYU

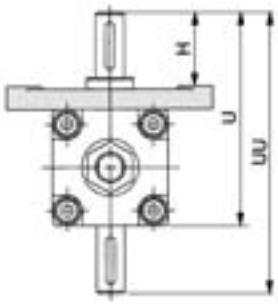

Note) Other dimensions are the same as the single shaft. (mm)

Model	H	U	UU
CRA1FYU50	39	114	150
CRA1FYU63	45	136	177
CRA1FYU80	55	165	215
CRA1FYU100	60	190	250

Flange style Double shaft with four chamfers: CRA1FZU

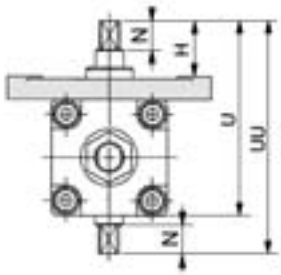

Note) Other dimensions are the same as the single shaft. (mm)

Model	H	N	U	UU
CRA1FZU50	30	15	105	125
CRA1FZU63	33	17	124	146
CRA1FZU80	43	20	153	178
CRA1FZU100	44	25	174	204

Size 50, 63, 80, 100

Single shaft type: CDRA1BSU

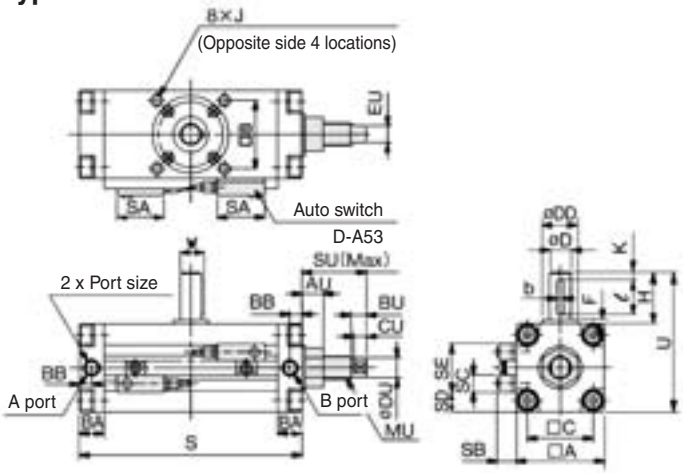

★ The dimensions above show pressurization to B port.
∗ ( ) are the dimensions for rotation of 180° and 190°.

Double shaft type: CDRA1BWU

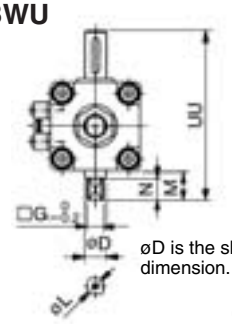

øD is the shaft dimension.

(mm)

Model	øD (g6)	□G	M	N	UU	øL
CDRA1BWU50	15	11	20	15	118	14
CDRA1BWU63	17	13	22	17	139	16
CDRA1BWU80	20	15	25	20	167	19
CDRA1BWU100	25	19	30	25	202	24

(mm)

Model	Port size ∗	□A	□B	□C	øD (g6)	øDD (h9)	F	H	J	K	S	U	W	BA	BB	SA	SB	SC	SD	SE	Key dimensions b	Key dimensions ℓ	AU	BU	CU	DU	EU	SU	MU
CDRA1BSU50	Rc 1/8	62	48	46	15	25	2.5	36	M8 x 1.25 depth 8	5	156 (189)	98	17	17	8.5	33	13.5	12	14	34	$5^{0}_{-0.030}$	25	15	11	9	14	12	45	M16 x 1.5
CDRA1BSU63	Rc 1/8	76	60	57	17	30	2.5	41	M10 x 1.5 depth 12	5	175 (213.5)	117	19.5	20	10	33	14.5	12	21	34	$6^{0}_{-0.030}$	30	19	13	11	18	14	54.5	M20 x 1.5
CDRA1BSU80	Rc 1/4	92	72	70	20	35	3	50	M12 x 1.75 depth 13	5	199 (243)	142	22.5	23.5	12	33	15.5	12	29	34	$6^{0}_{-0.030}$	40	22	16	13	22	19	62.5	M24 x 1.5
CDRA1BSU100	Rc 3/8	112	85	85	25	40	4	60	M12 x 1.75 depth 14	5	259 (325)	172	28	25	12.5	33	16	12	39	34	$8^{0}_{-0.036}$	45	22	16	13	22	19	73.5	M24 x 1.5

∗ In addition to Rc, G and NPT are also available.

Foot style: CDRA1LSU

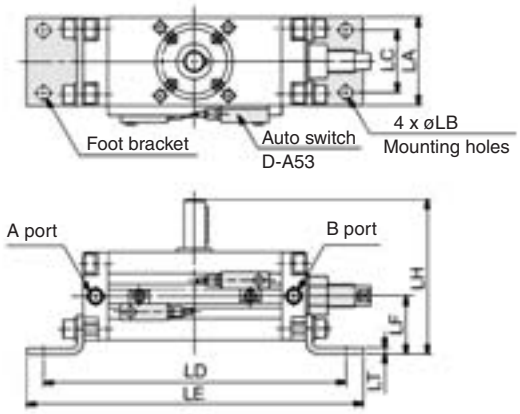

★ The dimensions above show pressurization to B port.
∗ ( ) are the dimensions for rotation of 180° and 190°.
Note) Other dimensions are the same as the single shaft.

(mm)

Model	LA	øLB	LC	LD	LE	LF	LH	LT
CDRA1LSU50	62	9	44	212 (245)	236 (269)	41	108	4.5
CDRA1LSU63	76	11	55	247 (285.5)	275 (313.5)	48	127	5
CDRA1LSU80	92	13	67	287 (331)	329 (373)	58	154	6
CDRA1LSU100	112	13	87	347 (413)	389 (455)	73.5	189.5	6

Flange style single shaft: CDRA1FSU

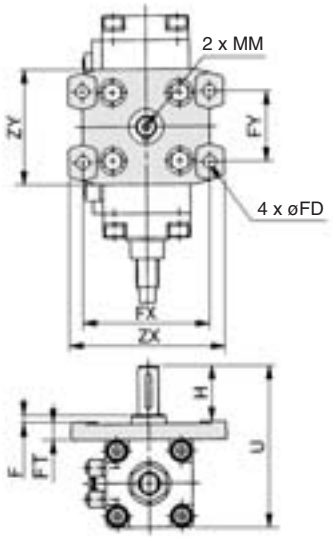

(mm)

Model	F	H	MM	U	øFD	FT	FX	FY	ZX	ZY
CDRA1FSU50	4	39	M6 x 1.0 depth 12	114	9	13	90	50	110	81
CDRA1FSU63	5	45	M6 x 1.0 depth 12	136	11.5	15	105	59	130	101
CDRA1FSU80	5	55	M8 x 1.25 depth 16	165	13.5	18	130	76	160	119
CDRA1FSU100	5	60	M10 x 1.5 depth 20	190	13.5	18	150	92	180	133

Series CRA1 (Size 30, 50, 63, 80, 100)
Simple Specials:
-XA1 to -XA24: Shaft Pattern Sequencing I

Shaft shape pattern is dealt with simple made-to-order system. (Refer to front matter 33.)
Please contact SMC for a specification sheet when placing an order.

Shaft Pattern Sequencing I

Applicable shaft type: S, W, Y

How to Order

C D RA1 B S P 50 – 90 C – F59 – X A2 A24 C10 -X6

Built-in magnet

Nil	None
D	Built-in magnet

Mounting style

B	Basic style
L	Foot style

Shaft type

S	Single shaft key
W	Double shaft (Long shaft and with four chamfers)
Y	Double shaft key

Type

Nil	Pneumatic
H	Air-hydro

Pattern

Size

30
50
63
80
100

Rotating angle

90°
100°
180°
190°

Air cushion

Nil	None
C *	With air cushion

* For pneumatic type only.

Auto switch

Refer to page 193 for the part no. of auto switches.

Simple specials, Made-to-order symbol

- Refer to chart 1, 2 and 3 when the number of combinations is one or two.

* Combination of XA is possible for up to 2 types.

• Combination 3 Types / **• Combination of Applicable Chart**

			Applicable Chart
A1	A24	C30	Chart 1, 2
A2	A24	-X6	Chart 1, 3
A13	C8	C59	Chart 2, 7
A14	C60	-X6	Chart 2, 3, 8
A15	-X10	-X16	Chart 3, 9

Combination is available only when all the conditions are fulfilled in above combination chart.

• Combination 4 Types / **• Combination of Applicable Chart**

				Applicable Chart
A1	A2	C8	C59	Chart 1, 2, 7
A2	A24	C10	-X6	Chart 1, 2, 3, 8
A13	A24	-X6	-X16	Chart 1, 3, 9
A14	C11	C30	-X16	Chart 2, 3, 7, 8
A15	C60	-X10	-X16	Chart 2, 3, 8, 9
A14	C32	C61	C62	Chart 2, 7

Combination is available only when all the conditions are fulfilled in above combination chart.

* Combination of simple special and made-to-order is available for up to 4 types.
* Above is the typical example of combination.

How to order model with auto switches

Refer to page 193 for "How to Order" products with auto switch.

How to order model with solenoid valve

Refer to page 208 for "How to order" products with solenoid valve.

Refer to page 192 for "How to Order".

How to order angle adjustable type

Refer to page 214 for "How to Order" angle adjustable type.

Simple Specials: -XA1 to -XA24: Shaft Pattern Sequencing I

Made to Order

Shaft shape pattern is dealt with simple made-to-order system. (Refer to front matter 33.)
Please contact SMC for a specification sheet when placing an order.

Combination Chart of Simple Specials for Tip End Shape

Chart 1. Combination between -XA□ and -XA□ (S, W, Y shaft)

Symbol	Description	Shaft direction		Shaft type			Combination			
		Upper	Lower	S	W	Y	XA1	XA2	XA13	XA24
XA 1	Female thread at the end	●	–	●	●	●	–	●	–	●
XA 2	Female thread at the end	–	●	●	●	●	●	–	–	●
XA13	Shaft through-hole	●	●	●	●	●	–	–	–	●
XA14	Shaft through-hole + Rod end female thread	●	–	●	●	●	–	–	–	●
XA15	Shaft through-hole + Rod end female thread	–	●	●	●	●	–	–	–	●
XA16	Shaft through-hole + Double shaft-end female threads	●	●	●	●	●	–	–	–	●
XA17	Shorted shaft (Long shaft with key)	●	–	●	●	●	–	●	●	–
XA18	Shorted shaft (Short shaft and with four sided chamfer)	–	●	–	●	●	W, Y *	–	W, Y *	–
XA19	Shorted shaft (Double shaft)	●	●	–	●	●	–	–	W, Y *	–
XA20	Reverse shaft, Shorted shaft	●	●	–	●	●	–	–	S, W *	–
XA24	Double key	●	–	●	●	●	–	–	–	–

* Corresponding shafts type available for combination.

Combination Chart of Made to Order

Chart 2. Combination between -XA□ and -XC□

Symbol	Description	Shaft type			Applicable size	Combination	
		S	W	Y		XA1,2,13 to 19	XA20,24
XC 7	Reversed shaft	●	●	–	50, 63, 80, 100	–	–
XC 8 to XC11	Change of rotating range	●	●	●		●	–
XC30	Fluorine grease	●	●	●	30 to 100	●	●
XC31 to XC36	Change of rotation range and shaft rotation direction	●	●	●	50, 63, 80, 100	●	–
XC37 to XC46	Change of rotation range and angle adjusting direction	●	●	●		●	–
XC47 to XC58	Change of rotation range and angle adjusting direction (Angle adjusting screw is equipped on the left.)	●	●	●		●	–
XC59 to XC61	Change of port direction	●	●	●	30 to 100	●	●
XC62	Reverse mounting of auto switch	●	●	●	50, 63, 80, 100	●	●
XC63	One side hydro, One side air	●	●	●		●	●
XC64	One side hydro, One side air	●	●	●		●	●

Chart 3. Combination between -XA□ and -X□

Symbol	Description	Shaft type			Applicable size	Combination	
		S	W	Y		XA1,2,13 to 20	XA24
X 6	Shaft, bolt made of stainless steel	●	●	●	30 to 100	●	●
X 7	Heat resistance (100°C)	●	●	●		●	●
X10	Angle adjustment for both sides	●	●	●	50 to 100	●	●
X11	Angle adjustment for single side, Air cushion with single side	●	●	●		●	●
X16	Fluororubber seal	●	●	●	30 to 100	●	●

* **Chart 7. For combination between -XC□ and -XC□, refer to page 231.**
Chart 8. For combination between -X□ and -XC□, refer to page 231.
Chart 9. For combination between -X□ and -X□, refer to page 242.

Series CRA1 (Size 30, 50, 63, 80, 100)
Simple Specials:
-XA1 to -XA24: Shaft Pattern Sequencing I

Shaft shape pattern is dealt with simple made-to-order system. (Refer to front matter 33.)
Please contact SMC for a specification sheet when placing an order.

-XA1 to XA17

Additional Reminders

1. Enter the dimensions within a range that allows for additional machining.
2. SMC will make appropriate arrangements if no dimensional, tolerance, or finish instructions are given in the diagram.
3. The length of the unthreaded portion is 2 to 3 pitches.
4. Unless specified otherwise, the thread pitch is based on coarse metric threads.
   P = Thread pitch
   M3 x 0.5, M4 x 0.7, M 5 x 0.8
   M6 x 1, M8 x 1.25, M10 x 1.5
5. Enter the desired figures in the portion of the diagram.
6. Chamfer face of the parts machining additionally is C0.5.

Symbol: A1
Machine female threads into the long shaft.
Note) Except flange style

The maximum dimension L1 is, as a rule, twice the thread size.
(Example) For M3: L1 = 6
• Applicable shaft types: S, W, Y

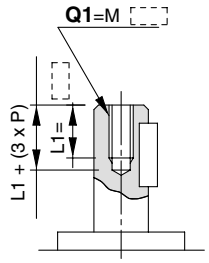

(mm)

Size	Q1
30	M3
50	M4, M5, M6
63	M4, M5, M6
80	M4, M5, M6, M 8
100	M5, M6, M8, M10

Symbol: A2
Machine female threads into the short shaft.
Note) Except flange style

The maximum dimension L2 is, as a rule, twice the thread size.
(Example) For M4: L2 = 8
• Applicable shaft types: S, W, Y

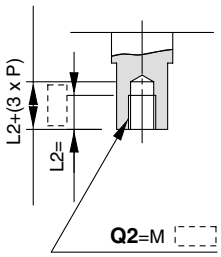

(mm)

Size	Q2
30	M3, M4
50	M4, M5, M6
63	M4, M5, M6
80	M4, M5, M6, M 8
100	M5, M6, M8, M10

Symbol: A13
Shaft with through-hole
Note) Except flange style

Minimum machining diameter for d1 is 0.1.
• Applicable shaft types: S, W, Y

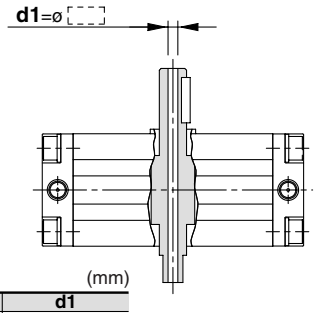

(mm)

Size	d1
30	ø2.5
50	ø4. to ø 7
63	ø4.5 to ø18
80	ø6.8 to ø11
100	ø6.8 to ø13

Symbol: A14
Note) Except flange style

A special end is machined onto the long shaft, and a through-hole is drilled into it. Female threads are machined into the through-hole, whose diameter is equivalent to the pilot hole diameter.
The maximum dimension L1 is, as a rule, twice the thread size.
(Example) For M3: L1 = 6
• Applicable shaft types: S, W, Y

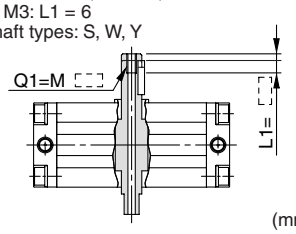

(mm)

Thread \ Size	30	50	63	80	100
M3 x 0.5	ø2.5	–	–	–	–
M5 x 0.8	–	ø4	ø4	–	–
M6 x 1	–	ø5	ø5	–	–
M8 x 1.25	–	–	ø6.8	ø 6.8	ø 6.8
M10 x 1.5	–	–	–	ø 8.5	ø 8.5
M12 x 1.75	–	–	–	ø10.3	ø10.3
Rc1/8	–	–	–	ø 8	ø 8
Rc1/4	–	–	–	–	ø11

Symbol: A15
Note) Except flange style

A special end is machined onto the short shaft, and a through-hole is drilled into it. Female threads are machined into the through-hole, whose diameter is equivalent to the pilot hole diameter. The maximum dimension L2 is, as a rule, twice the thread size.
(Example) For M4: L2 = 8
• Applicable shaft types: S, W, Y

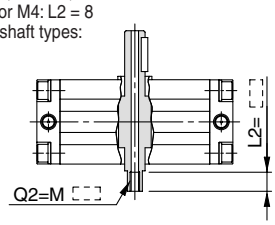

(mm)

Thread \ Size	30	50	63	80	100
M3 x 0.5	ø2.5	–	–	–	–
M5 x 0.8	–	ø4	ø4	–	–
M6 x 1	–	ø5	ø5	–	–
M8 x 1.25	–	–	ø6.8	ø 6.8	ø 6.8
M10 x 1.5	–	–	–	ø 8.5	ø 8.5
M12 x 1.75	–	–	–	ø10.3	ø10.3
Rc1/8	–	–	–	ø 8	ø 8
Rc1/4	–	–	–	–	ø11

Symbol: A16
Note) Except flange style

A special end is machined onto both the long and short shafts, and a through-hole is drilled into both shafts. Female threads are machined into the through-holes, whose diameter is equivalent to the diameter of the pilot holes. The maximum dimension L1 is, as a rule, twice the thread size. (Example) For M5: L1 = 10
• Applicable shaft types: S, W, Y
• Equal dimensions are indicated by the same marker.

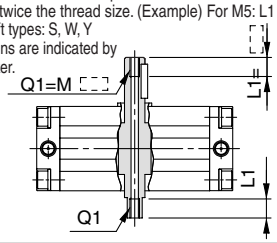

(mm)

Thread \ Size	30	50	63	80	100
M3 x 0.5	ø2.5	–	–	–	–
M5 x 0.8	–	ø4	ø4	–	–
M6 x 1	–	ø5	ø5	–	–
M8 x 1.25	–	–	ø6.8	ø 6.8	ø 6.8
M10 x 1.5	–	–	–	ø 8.5	ø 8.5
M12 x 1.75	–	–	–	ø10.3	ø10.3
Rc1/8	–	–	–	ø 8	ø 8
Rc1/4	–	–	–	–	ø11

Symbol: A17
• Shorten the long shaft.
• Applicable shaft types: S, W, Y

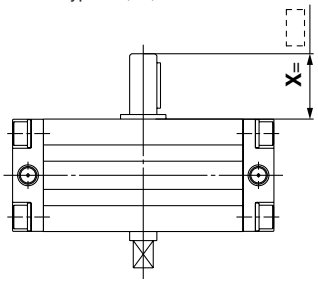

(mm)

Size	X
30	15 to 25
50	18.5 to 36
63	21 to 41
80	25 to 50
100	32.5 to 60

Simple Specials:
-XA1 to -XA24: Shaft Pattern Sequencing I

Made to Order

Shaft shape pattern is dealt with simple made-to-order system. (Refer to front matter 33.)
Please contact SMC for a specification sheet when placing an order.

Symbol: A18

Shorten the long shaft.
• Applicable shaft types: W, Y

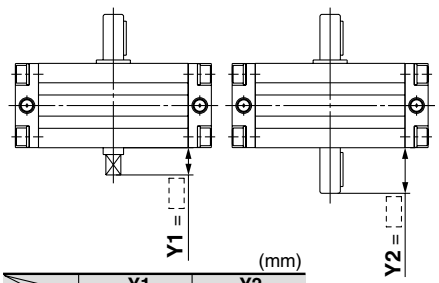

(mm)

Size \ Shaft types	Y1 W	Y2 Y
30	3 to 8	15 to 25
50	1 to 20	18.5 to 36
63	1 to 22	21 to 41
80	1 to 25	25 to 50
100	1 to 30	32.5 to 60

Symbol: A19

Both the long shaft and short shaft are shortened.
• Applicable shaft type: W, Y

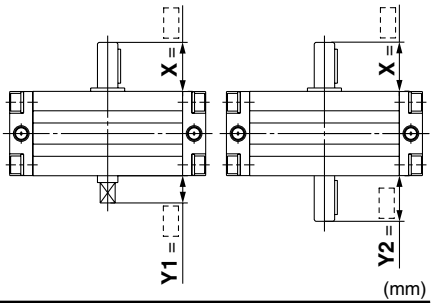

(mm)

Size \ Shaft types	X W	X Y	Y1 W	Y2 Y
30	15 to 25		3 to 8	15 to 25
50	18.5 to 36		1 to 20	18.5 to 36
63	21 to 41		1 to 22	21 to 41
80	25 to 50		1 to 25	25 to 50
100	32.5 to 60		1 to 30	32.5 to 60

Symbol: A20

Reverse the assembly of the shaft. (Thus shortening the long end and the short end of the shaft.)
(If shortening the shaft is not required, indicate "*" for dimension X and Y.)
• Applicable shaft types: S, W

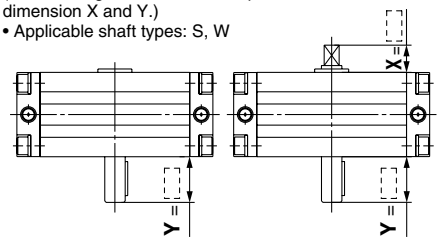

(mm)

Size \ Shaft types	X W	Y S	Y W
50	2 to 11	18.5 to 36	
63	2.5 to 16.5	21 to 41	
80	3 to 20	25 to 50	
100	3 to 22	32.5 to 60	

Symbol: A24

Double key
Keys and keyways are machined at 180° from the standard position.
• Applicable shaft types: S, W, Y
• Equal dimensions are indicated by the same marker.

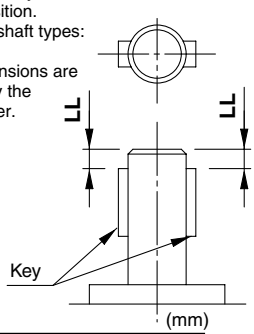

(mm)

Size	Key dimensions	LL
30	3 x 3 x 14	3
50	5 x 5 x 25	5
63	6 x 6 x 30	5
80	6 x 6 x 40	5
100	8 x 7 x 45	5

Series CRA1 (Size 30, 50, 63, 80, 100)
Simple Specials:
-XA33 to -XA59: Shaft Pattern Sequencing II

Shaft shape pattern is dealt with simple made-to-order system. (Refer to front matter 33.)
Please contact SMC for a specification sheet when placing an order.

Shaft Pattern Sequencing II

Applicable shaft type: X, Z, T, J, K

How to Order

C D RA1 B J P 50 – 90 C – F59 – X A34 A37 C59 -X6

Built in magnet

Nil	None
D	Built-in magnet

Mounting style

B	Basic style
L	Foot style

Shaft type

X	Single shaft with four chamfers
Z	Double shaft with four chamfers
T	Single round shaft
J	Double shaft (Long shaft without key & with four chamfers)
K	Double round shaft

Type

Nil	Pneumatic
H	Air-hydro

Pattern

Size

30
50
63
80
100

Ratating angle

90°
100°
180°
190°

Suffix symbol

Nil	Without air cushion
C *	With air cushion

* For pneumatic type only.

Auto switch

Refer to page 193 for the part no. of auto switches.

Simple specials, Made-to-order symbol

- Refer to chart 4, 5 and 6 when the number of combinations is one or two.

* Combination of XA is possible for up to 2 types.

• Combination 3 Types / **• Combination of Applicable Chart**

			Applicable Chart
A33	A34	C30	Chart 4, 5
A34	A37	-X6	Chart 4, 6
A35	C30	C59	Chart 5, 7
A40	C60	-X6	Chart 5, 6, 8
A43	-X10	-X16	Chart 6, 9

Combination is available only when all the conditions are fulfilled in above combination chart.

• Combination 4 Types / **• Combination of Applicable Chart**

				Applicable Chart
A33	A34	C30	C59	Chart 4, 5, 7
A34	A37	C59	-X6	Chart 4, 5, 6, 8
A35	A36	-X6	-X16	Chart 4, 6, 9
A43	C59	C62	-X16	Chart 5, 6, 7, 8
A45	C60	-X10	-X16	Chart 5, 6, 8, 9
A46	C30	C61	C62	Chart 5, 7

Combination is available only when all the conditions are fulfilled in above combination chart.

* Combination of simple special and made-to-order, it is possible for up to 4 types.
* Above is the typical example of combination.

How to order model with auto switches

Refer to page 193 for "How to Order" products with auto switch.

How to order model with solenoid valve

Refer to page 208 for "How to order" products with solenoid valve,

Refer to page 192 for "How to Order".

How to order angle adjustable type

Refer to page 214 for "How to Order" angle adjustable type.

Series CRA1 (Size 30, 50, 63, 80, 100)
Simple Specials:
-XA33 to -XA59: Shaft Pattern Sequencing II

Made to Order

Shaft shape pattern is dealt with simple made-to-order system. (Refer to front matter 33.)
Please contact SMC for a specification sheet when placing an order.

Combination Chart of Simple Specials for Tip End Shape

Chart 4. Combination between -XA□ and -XA□

Symbol	Description	Shaft direction		Shaft type					Combination									
		Upper	Lower	X	Z	T	J	K	∗ Corresponding shafts type available for combination									
XA33	Female thread at the end	●	–	–	–	●	●	●	**XA33**									
XA34	Female thread at the end	–	●	–	–	●	●	●	T, J, K ∗	**XA34**								
XA35	Female thread at the end	●	–	●	●	–	–	–	—	—	**XA35**							
XA36	Female thread at the end	–	●	●	●	–	–	–	—	—	X,Z ∗	**XA36**						
XA37	Stepped round shaft	●	–	–	–	●	●	●	—	T, J, K ∗	—	—	**XA37**					
XA38	Stepped round shaft	–	●	–	–	–	–	●	K ∗	—	—	—	K ∗					
XA40	Shaft through hole	●	●	–	–	●	–	●	—	—	—	—	—					
XA41	Shaft through hole	●	●	●	●	–	●	–	—	—	—	—	—					
XA43	Shaft through-hole + Double shaft-end-female threads	●	●	–	–	●	–	●	—	—	—	—	—					
XA44	Shaft through-hole + Double shaft-end-female threads	●	●	●	●	–	●	–	—	—	—	—	—	**XA38**				
XA45	Middle-cut chamfer	●	–	–	–	●	●	●	—	T, J, K ∗	—	—	—	K ∗	**XA40**	**XA41**	**XA45**	
XA46	Middle-cut chamfer	–	●	–	–	–	–	●	K ∗	—	—	—	K ∗	—	—	—	K ∗	**XA46**
XA51	Change of long shaft length (Without keyway)	●	–	–	–	●	●	●	—	T, J, K ∗	—	—	—	K ∗	T, K ∗	J ∗	—	K ∗
XA52	Change of short shaft length (Without keyway)	–	●	–	–	–	–	●	K ∗	—	—	—	—	—	K ∗	—	K ∗	—
XA53	Change of double shaft length (Both without keyway)	●	●	–	–	–	–	●	—	—	—	—	—	—	K ∗	—	—	—
XA54	Change of long shaft length (With four chamfers)	●	–	●	●	–	–	–	—	—	—	X, Z ∗	—	—	—	X, Z ∗	—	—
XA55	Change of short shaft length (With four chamfers)	–	●	–	●	–	●	–	J ∗	—	Z ∗—	—	J ∗	—	—	J, Z ∗	J ∗	—
XA56	Change of double shaft length (Both with four chamfers)	●	●	–	●	–	–	–	—	—	—	—	—	—	—	Z ∗	—	—
XA57	Change of double shaft length (Without keyway, With hour chamfers)	●	●	–	–	–	●	–	—	—	—	—	—	—	—	J ∗	—	—
XA58	Reversed shaft, Change of shaft length (With four chamfers, Without keyway)	●	●	–	–	●	●	–	—	—	—	—	—	—	T ∗	J ∗	—	—
XA59	Reversed shaft, Change of shaft length (With four chamfers)	–	●	●	–	–	–	–	—	—		—	—	—	—	X ∗	—	—

Combination Chart of Made to Order

Chart 5. Combination between -XA□ and -XC□

Symbol	Description	Shaft type					Applicable size	Combination
		X	Z	T	J	K		XA33 to 38, 40 to 46, 51 to 59
XC7	Reversed shaft	●	–	●	●	–	50, 63, 80, 100	–
XC8 to XC11	Change of rotating range	–	–	–	–	–		–
XC30	Fluorine grease	●	●	●	●	●	30 to 100	●
XC31 to XC36	Change of rotation range and shaft rotation direction	–	–	–	–	–	50, 63, 80, 100	–
XC37 to XC46	Change of rotation range and angle adjusting direction	–	–	–	–	–		–
XC47 to XC58	Change of rotation range and angle adjusting direction (Angle adjusting screw is equipped on the left.)	–	–	–	–	–		–
XC59 to XC61	Change of port direction	●	●	●	●	●	30 to 100	●
XC62	Reverse mounting of auto switch	●	●	●	●	●	50, 63, 80, 100	●
XC63	One side hydro, One side air	●	●	●	●	●		●
XC64	One side hydro, One side air	●	●	●	●	●		●

Chart 6. Combination between -XA□ and -X□

Symbol	Description	Shaft type					Applicable size	Combination
		X	Z	T	J	K		XA33 to 38, 40 to 46, 51 to 59
X6	Shaft, bolt made of stainless steel	●	●	●	●	●	30 to 100	●
X7	Heat resistance (100°C)	●	●	●	●	●		●
X10	Angle adjustment for both sides	●	●	●	●	●	50 to 100	●
X11	Angle adjustment for single side, Air cushion with single side	●	●	●	●	●		●
X16	Fluororubber seal	●	●	●	●	●	30 to 100	●

∗ **Chart 7. For combination between -XC□ and -XC□, refer to page 231.**
Chart 8. For combination between -X□ and -XC□, refer to page 231.
Chart 9. For combination between -X□ and -X□, refer to page 242.

Series CRA1 (Size 30, 50, 63, 80, 100)
Simple Specials:
-XA33 to -XA59: Shaft Pattern Sequencing II

Shaft shape pattern is dealt with simple made-to-order system. (Refer to front matter 33.)
Please contact SMC for a specification sheet when placing an order.

-XA33 to XA41

Additional Reminders

1. Enter the dimensions within a range that allows for additional machining.
2. SMC will make appropriate arrangements if no dimensional, tolerance, or finish instructions are given in the diagram.
3. The length of the unthreaded portion is 2 to 3 pitches.
4. Unless specified otherwise, the thread pitch is based on coarse metric threads.
   P = Thread pitch
   M3 x 0.5, M4 x 0.7, M 5 x 0.8
   M6 x 1, M8 x 1.25, M10 x 1.5
5. Enter the desired figures in the portion of the diagram.
6. Chamfer face of the parts machining additionally is C0.5.

Symbol: A33
Machine female threads into the long shaft.
Note) Except flange style

The maximum dimension L1 is, as a rule, twice the thread size.
(Example) For M3: L1 = 6
• Applicable shaft types: J, K, T

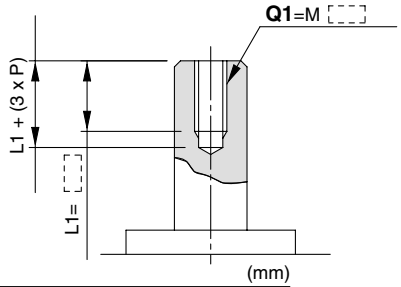

(mm)

Size	Q1
30	M3
50	M4, M5, M6, M 8
63	M4, M5, M6, M 8, M10
80	M4, M5, M6, M 8, M10, M12
100	M5, M6, M8, M10, M12

Symbol: A34
Machine female threads into the short shaft.
Note) Except flange style

The maximum dimension L2 is, as a rule, twice the thread size.
(Example) For M3: L2 = 6
• Applicable shaft types: J, K, T

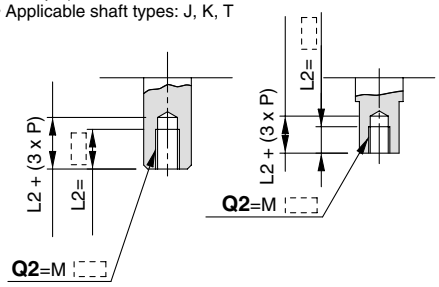

(mm)

Size	Q2
30	M3
50	M4, M5, M6, M 8
63	M4, M5, M6, M 8, M10
80	M4, M5, M6, M 8, M10, M12
100	M5, M6, M8, M10, M12

Symbol: A35
Machine female threads into the shaft.
Note) Except flange style

The maximum dimension L1 is, as a rule, twice the thread size.
(Example) For M3: L1 = 6
• Applicable shaft types: X, Z

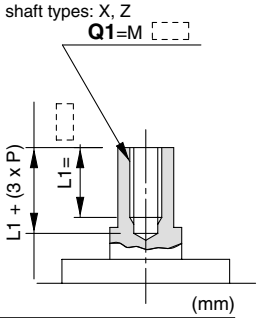

(mm)

Size	Q1
30	M3
50	M4, M5, M6, M 8
63	M4, M5, M6, M 8, M10
80	M4, M5, M6, M 8, M10, M12
100	M5, M6, M8, M10, M12

Symbol: A36
Machine female threads into the short shaft.
Note) Except flange style

The maximum dimension L2 is, as a rule, twice the thread size.
(Example) For M4: L2 = 8
• Applicable shaft types: X, Z

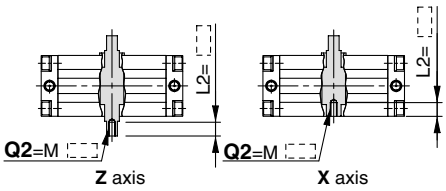

(mm)

Size	Q2
30	M3
50	M4, M5, M6, M 8
63	M4, M5, M6, M 8, M10
80	M4, M5, M6, M 8, M10, M12
100	M5, M6, M8, M10, M12

Symbol: A37
Note) Except flange style

The long shaft can be further shortened by machining it into a stepped round shaft.
• Minimum machining diameter is 0.1.
(If shortening the shaft is not required, indicate "*" for dimension X.)
(If not specifying dimension C1, indicate "*" instead.)
• Applicable shaft types: J, K, T
• Equal dimensions are indicated by the same marker.

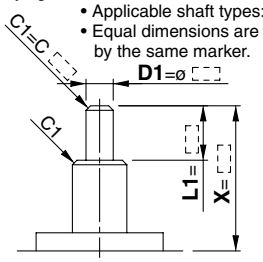

(mm)

Size	X	L1max	D1
30	3 to 25	X-2	ø5 to ø7.9
50	3.5 to 36	X-2.5	ø5 to ø14.9
63	3.5 to 41	X-2.5	ø5 to ø16.9
80	4 to 50	X-3	ø8 to ø19.9
100	5 to 60	X-4	ø8 to ø24.9

Symbol: A38
Note) Except flange style

The short shaft can be further shortened by machining it into a stepped round shaft.
• Minimum machining diameter is 0.1.
(If shortening the shaft is not required, indicate "*" for dimension Y.)
(If not specifying dimension C2, indicate "*" instead.)
• Applicable shaft type: K
• Equal dimensions are indicated by the same marker.

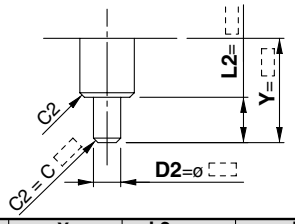

(mm)

Size	Y	L2 max	D2
30	3 to 25	Y-2	ø5 to ø7.9
50	1 to 36	Y	ø5 to ø14.9
63	1 to 41	Y	ø5 to ø16.9
80	1 to 50	Y	ø8 to ø19.9
100	1 to 60	Y	ø8 to ø24.9

Symbol: A40
Shaft with through-hole
Note) Except flange style

• Minimum machining diameter for d1 is 0.1.
• Applicable shaft types: K, T

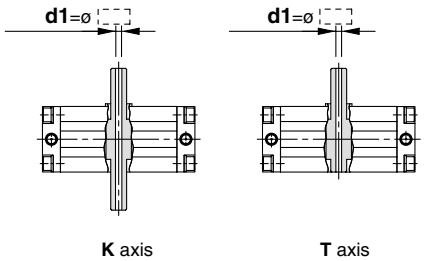

(mm)

Size	d1
30	ø2.5
50	ø4 to ø7.5
63	ø4 to ø8
80	ø6.8 to ø11
100	ø6.8 to ø13

Symbol: A41
Shaft with through-hole
Note) Except flange style

• Minimum machining diameter for d1 is 0.1.
• Applicable shaft types: J, X, Z

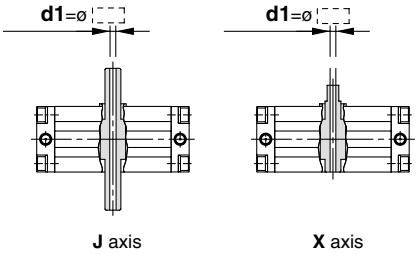

(mm)

Size	d1
30	ø2.5
50	ø4 to ø7.5
63	ø4 to ø8
80	ø6.8 to ø11
100	ø6.8 to ø13

Series CRA1 (Size 30, 50, 63, 80, 100)
Simple Specials:
-XA33 to -XA59: Shaft Pattern Sequencing II

Made to Order

Shaft shape pattern is dealt with simple made-to-order system. (Refer to front matter 33.)
Please contact SMC for a specification sheet when placing an order.

Symbol: A43
Shaft through-hole and female thread
Note) Except flange style

- Applicable shaft types: K, T
- Equal dimensions are indicated by the same marker.

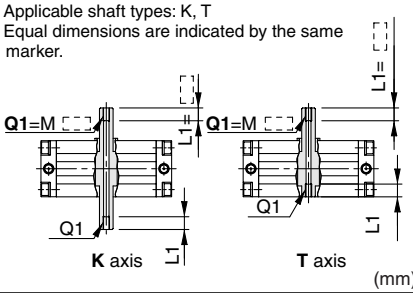

(mm)

Thread \ Size	30	50	63	80	100
M 3 x 0.5	ø2.5	–	–	–	–
M 5 x 0.8	–	ø4	ø4	–	–
M 6 x 1	–	ø5	ø5	–	–
M 8 x 1.25	–	–	ø6.8	ø 6.8	ø 6.8
M10 x 1.5	–	–	–	ø 8.5	ø 8.5
M12 x 1.75	–	–	–	ø10.3	ø10.3
Rc 1/8	–	–	–	ø 8	ø 8
Rc 1/4	–	–	–	–	ø11

Symbol: A44
Note) Except flange style

Shaft through-hole and female thread machining
- Applicable shaft types: J, X, Z
- Equal dimensions are indicated by the same marker.

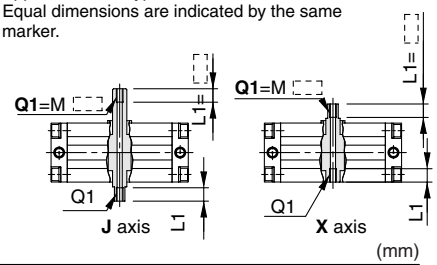

(mm)

Thread \ Size	30	50	63	80	100
M 3 x 0.5	ø2.5	–	–	–	–
M 5 x 0.8	–	ø4		–	–
M 6 x 1	–	ø5	ø4.3	–	–
M 8 x 1.25	–	–	ø5.8	ø 6.8	ø 6.8
M10 x 1.5	–	–	ø6.8	ø 8.5	ø 8.5
M12 x 1.75	–	–	–	ø10.3	ø10.3
Rc 1/8	–	–	–	ø 8	ø 8
Rc 1/4	–	–	–	–	ø11

Symbol: A45
Note) Except flange style

The long shaft can be further shortened by machining a middle-cut chamfer into it.
- Minimum machining diameter is 0.1.
  (The position is that of the standard flat at the keyway portion.)
  (If shortening the shaft is not required, indicate "*" for dimension X.)
- Applicable shaft types: J, K, T

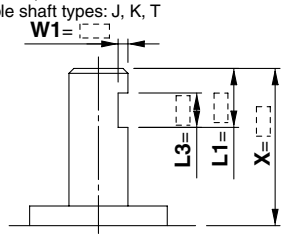

(mm)

Size	X	W1	L1 max	L3 max
30	8.5 to 25	1 to 2	X-2	L1-2
50	12.5 to 36	1 to 5.5	X-2.5	L1-2
63	13.5 to 41	1 to 6.5	X-2.5	L1-2
80	16.5 to 50	1 to 8	X-3	L1-3
100	21 to 60	1.5 to 10.5	X-4	L1-4

Symbol: A46
Note) Except flange style

The short shaft can be further shortened by machining a middle-cut chamfer into it.
- Minimum machining diameter is 0.1.
  (The position is that of the standard flat at the keyway portion.)
  (If shortening the shaft is not required, indicate "*" for dimension Y.)
- Applicable shaft type: K

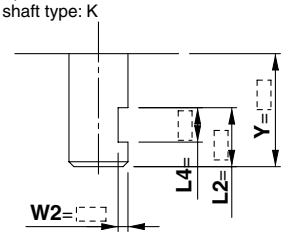

(mm)

Size	Y	W2	L2 max	L4 max
30	8.5 to 25	1 to 2	Y-2	L2-2
50	10 to 36	1 to 5.5	Y	L2-2
63	11 to 41	1 to 6.5	Y	L2-2
80	13.5 to 50	1 to 8	Y	L2-3
100	17 to 60	1.5 to 10.5	Y	L2-4

Symbol: A51

Shorten the long shaft.
- Applicable shaft types: J, K, T

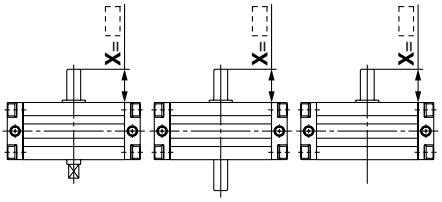

(mm)

Size	X
30	3 to 25
50	3.5 to 36
63	3.5 to 41
80	4 to 50
100	5 to 60

Symbol: A52

Shorten the short shaft.
- Applicable shaft type: K

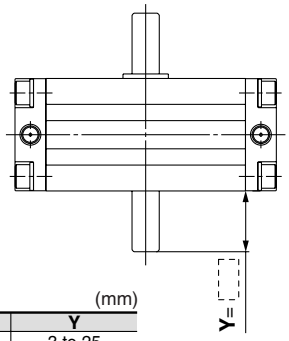

(mm)

Size	Y
30	3 to 25
50	1 to 36
63	1 to 41
80	1 to 50
100	1 to 60

Symbol: A53

Shorten the long and short shafts.
- Applicable shaft type: K

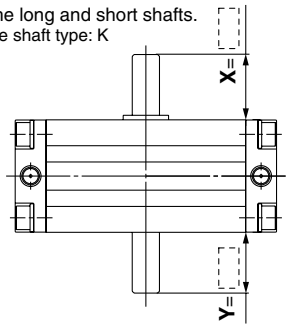

(mm)

Size	X	Y
30	3 to 25	3 to 25
50	3.5 to 36	1 to 36
63	3.5 to 41	1 to 41
80	4 to 50	1 to 50
100	5 to 60	1 to 60

Symbol: A54

Shorten the long shaft.
- Applicable shaft types: X, Z

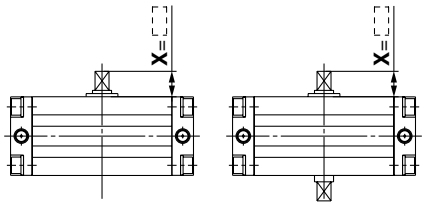

(mm)

Size	X
30	3 to 13
50	3.5 to 27
63	3.5 to 29
80	4 to 38
100	5 to 44

Symbol: A55

Shorten the short shaft.
- Apricable shaft types: J, Z

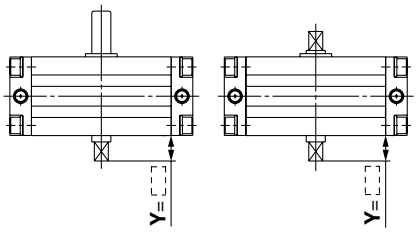

(mm)

Size	Y
30	3 to 10
50	1 to 20
63	1 to 22
80	1 to 25
100	1 to 30

Simple Specials:
-XA33 to -XA59: Shaft Pattern Sequencing II

Shaft shape pattern is dealt with simple made-to-order system. (Refer to front matter 33.)
Please contact SMC for a specification sheet when placing an order.

-XA56 to XA59

Symbol: A56

Both the long shaft and short shaft are shortened.
• Applicable shaft type: Z

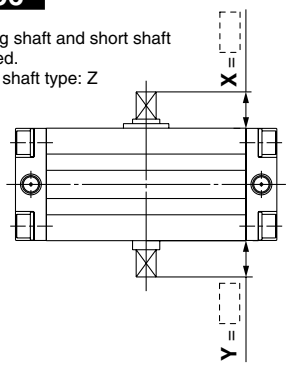

(mm)

Size	X	Y
30	3 to 13	3 to 10
50	3.5 to 27	1 to 20
63	3.5 to 29	1 to 22
80	4 to 38	1 to 25
100	5 to 44	1 to 30

Symbol: A57

Both the long shaft and short shaft are shortened.
• Applicable shaft type: J

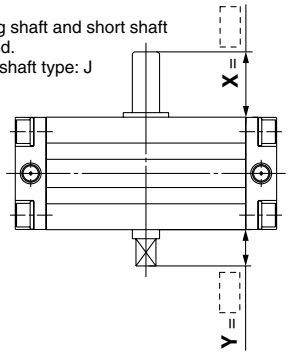

(mm)

Size	X	Y
30	3 to 25	3 to 10
50	3.5 to 36	1 to 20
63	3.5 to 41	1 to 22
80	4 to 50	1 to 25
100	5 to 60	1 to 30

Symbol: A58

The rotation axis is reversed, and then shorten the long and short shafts.
• Applicable shaft type: J, T

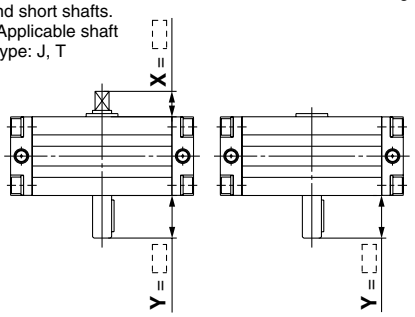

(mm)

Size	Y
50	1 to 36
63	1 to 41
80	1 to 50
100	1 to 60

Symbol: A59

The rotation axis is reversed, and then shorten the long and short shafts.
• Applicable shaft type: X

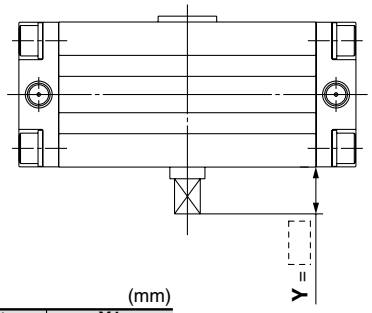

(mm)

Size	Y1
50	1 to 27
63	1 to 29
80	1 to 38
100	1 to 44

Made to Order Specifications: -XC7 to -XC64

Made to Order

How to Order

C | D | RA1 | B | S | | P | 50 — 90 | C — F59 — X | C59 | C62 | -X10 | -X16

Magnet

Nil	None
D	Built-in magnet

Mounting style

B	Basic style
L	Foot style
F	Flange style

Shaft type

S	Single shaft key
W	Double shaft (Long shaft and with four chamfers)
Y	Double shaft key
Z	Double shaft with four chamfers
T	Single round shaft
J	Double shaft (Long shaft without key & with four chamfers)
K	Double round shaft

Type

Nil	Pneumatic
H	Air-hydro

Pattern

Size

30
50
63
80
100

Rotating angle

90°
100°
180°
190°

Air cushion

Nil	None
C *	With air cushion

* For pneumatic type only.

Auto switch

Refer to page 193 for the part no. of auto switches.

Simple specials, Made-to-order symbol

- When the number of combinations are one or two, please refer to chart 7 and 8.

* Combination of XA is possible for up to 2 types.

• Combination 3 Types

C7	C30	C59
C31	C60	-X6
C59	-X10	-X16

• Combination of Applicable Chart

Chart 7
Chart 7, 8
Chart 8, 9

Combination is available only when all the conditions are fulfilled in above combination chart.

• Combination 4 Types

C7	C30	C59	C62
C31	C60	C62	-X6
C59	C62	-X10	-X16

• Combination of Applicable Chart

Chart 7
Chart 7, 8
Chart 7, 8, 9

Combination is available only when all the conditions are fulfilled in above combination chart.

* Combination of made-to-order is available up to 4 types.
* Above is the typical example of combination.
* Chart 9. For combination chart between -X□ and -X□, refer to page 242.

How to order model with auto switches

Refer to page 193 for "How to Order" products with auto switch.

How to order model with solenoid valve

Refer to page 208 for "How to order" products with solenoid valve,

Refer to page 192 for "How to Order".

How to order angle adjustable type

Refer to page 214 for "How to Order" angle adjustable type.

Combination Chart of Made to Order

Chart 7. Combination between -XC□ and -XC□

Part no.	Description	Shaft type S	W	X	Y	Z	T	J	K	Applicable size	Combination							
XC 7	Reversed shaft	●	●	●	—	—	●	●	—	50, 63 80, 100	XC7	* Corresponding shafts type available for combination						
XC 8 to XC11	Change of rotating range	●	●	—	●	—	—	—	—		—	XC 8 to XC11						
XC30	Fluorine grease	●	●	●	●	●	●	●	●	30 to 100	S, W, X, T, J *	S, W, Y *	XC30					
XC31 to XC36	Changes of rotation range and the revolving direction of shaft	●	●	—	●	—	—	—	—	50, 63 80, 100	—	—	S, W, Y *	XC31 to XC36				
XC37 to XC46	Changes of rotation range and the angle adjustment direction	●	●	—	●	—	—	—	—		—	—	S, W, Y *	—	XC37 to XC46			
XC47 to XC58	Change of rotation range and angle adjusting direction (Angle adjustment screw is set on the left side.)	●	●	—	●	—	—	—	—		—	—	—	—	—	XC47 to XC58		
XC59 to XC61	Change of port direction	●	●	●	●	●	●	●	●	30 to 100	S, W, Y *	●	S, W, Y *	S, W, Y *	S, W, Y *	S, W, Y *	XC59 to XC61	
XC62	Reverse mounting of auto switch	●	●	●	●	●	●	●	●	50, 63 80, 100	●	●	●	●	●	●	●	XC62
XC63	One side hydro, One side air	●	●	●	●	●	●	●	●		●	●	—	●	—	—	●	●
XC64	One side hydro, One side air	●	●	●	●	●	●	●	●		●	●	—	●	—	—	●	●

Chart 8. Combination between -X□ and -XC□ (Refer to page 242 for made-to-order/details on -X□.)

Part no.	Description	Shaft type S	W	X	Y	Z	T	J	K	Applicable size	XC7	XC8 to 11	XC30	XC31 to 36	XC37 to 58	XC59 to 61	XC62	XC63	XC64
X 6	Shaft, Bolt, Parallel key stainless spec.	●	●	●	●	●	●	●	●	30 to 100	●	●	●	●	—	●	●	●	●
X 7	Heat resistance (100°C)	●	●	●	●	●	●	●	●		●	●	—	●	●	●	—	—	—
X10	Angle adjustment for both sides	●	●	●	●	●	●	●	●	50 to 100	●	—	●	—	—	●	●	—	—
X11	Angle adjustment for single side, Air cushion with single side	●	●	●	●	●	●	●	●		●	—	—	—	—	●	●	—	—
X16	Fluororubber seal	●	●	●	●	●	●	●	●	30 to 100	●	●	●	●	●	●	●	—	—

Series CRA1
Made to Order Specifications:
-XC7: Reverse Mounting of Rotation Shaft (Size: 50 to 100)
-XC8 to -XC11: Change of Rotation Range (Size: 50 to 100)
-XC30 Fluoro Grease (Size: 30 to 100)

Please consult with SMC for further information on specifications, dimensions and delivery.

1 Reversed Shaft -XC7

CRA1 → Refer to "How to Order" on page 231. **— XC7**

Reverse mounting of rotation shaft (-XC7)

Specifications

Applicable size	**50, 63, 80, 100**
Applicable shaft type	Shaft S, W, X, T, J

Symbol: **C7**

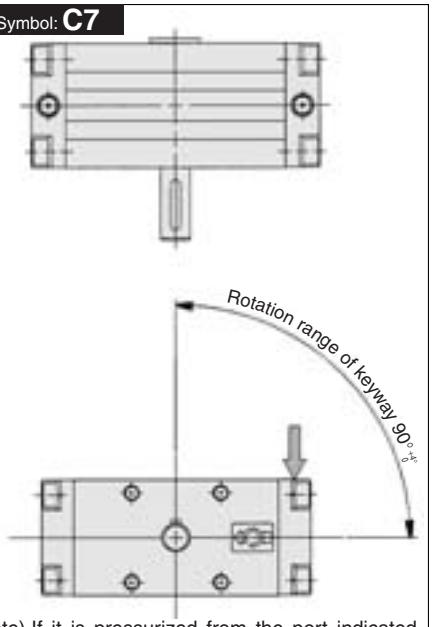

Note) If it is pressurized from the port indicated with the arrow, the shaft rotates in the clockwise direction.

2 Change of Rotating Range -XC8 to -XC11

CRA1 → Refer to "How to Order" on page 231. **— XC8**

Symbol XC8 to -XC11

Specifications

Applicable size	**50, 63, 80, 100**
Applicable shaft type	Shaft S, W, Y

The patterns with the rotation angle of 90° and 180° are applicable to the respective patterns with the rotation angles of 100° and 190° of the made-to-order specifications.

Symbol: **C8**

The rotation range is changed.

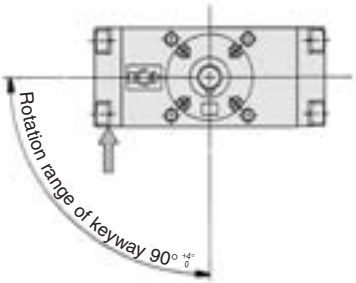

Note) If it is pressurized from the port indicated with the arrow, the shaft rotates in the clockwise direction.

Symbol: **C9**

The rotation range is changed.

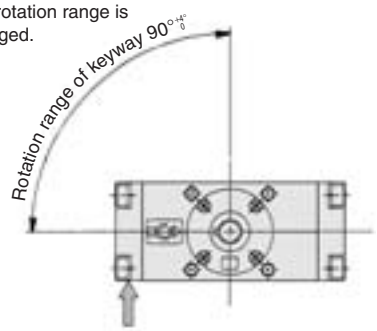

Note) If it is pressurized from the port indicated with the arrow, the shaft rotates in the clockwise direction.

Symbol: **C10**

The rotation range is changed.

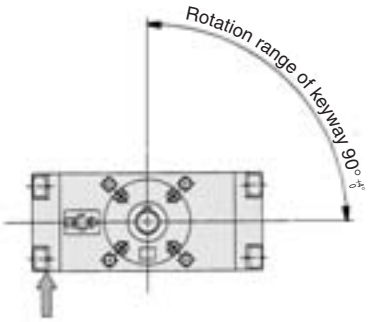

Note) If it is pressurized from the port indicated with the arrow, the shaft rotates in the clockwise direction.

Symbol: **C11**

The rotation range is changed.

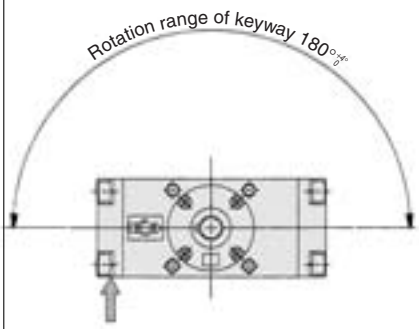

Note) If it is pressurized from the port indicated with the arrow, the shaft rotates in the clockwise direction.

3 Fluoro Grease -XC30

CRA1 → Refer to "How to Order" on page 231. **—XC30**

Fluoro grease

Lubricant oil in the seal part of packing and inner wall of the cylinder is changed to fluoro type.
(Not the low speed specifications.)

Specifications

Applicable size	**30, 50, 63, 80, 100**
Applicable shaft type	S, W, X, Y, Z, T, J, K

∗ Refer to page 194 for other specifications.
∗∗ Except air-hydro type.

Series CRA1 (Size: 50 to 100)
Made to Order Specifications:
-XC31 to -XC36: Change of Rotation Range and Rotation Direction of Shaft

Please consult with SMC for further information on specifications, dimensions and delivery.

4 Reversed Shaft — -XC31 to XC36

CRA1 → Refer to "How to Order" on page 231. **—XC31**

- **Change of the rotation range and the rotation direction of shaft (-XC31 to XC36)**

Specifications

Applicable size	**50, 63, 80, 100**
Applicable shaft type	Shaft S, W, Y

The patterns with the rotation angle of 90° and 180° are applicable to the respective patterns with the rotation angles of 100° and 190° of the made-to-order specifications.

Symbol: C31

The rotation range is changed and the rotating direction is reversed.

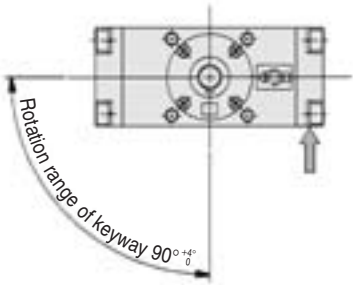

Note) If it is pressurized from the port indicated with the arrow, the shaft rotates in the clockwise direction.

Symbol: C32

The rotation range is changed and the rotating direction is reversed.

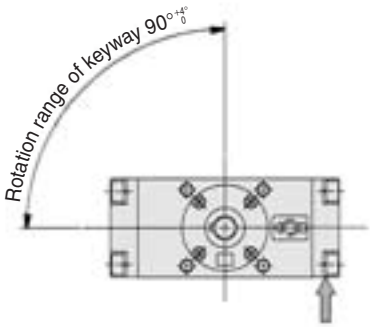

Note) If it is pressurized from the port indicated with the arrow, the shaft rotates in the clockwise direction.

Symbol: C33

The rotation range is changed and the rotating direction is reversed.

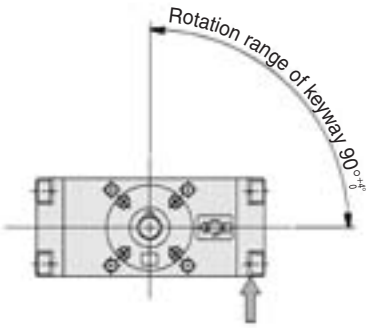

Note) If it is pressurized from the port indicated with the arrow, the shaft rotates in the clockwise direction.

Symbol: C34

The rotation range is changed and the rotating direction is reversed.

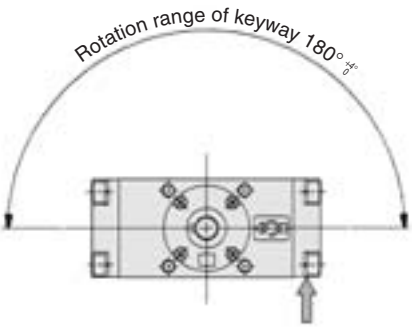

Note) If it is pressurized from the port indicated with the arrow, the shaft rotates in the clockwise direction.

Symbol: C35

The rotation range is changed and the rotating direction is reversed.

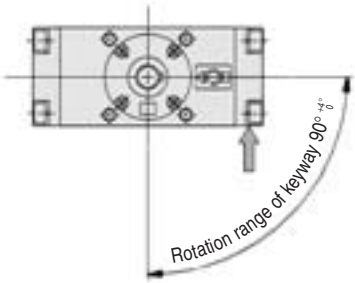

Note) If it is pressurized from the port indicated with the arrow, the shaft rotates in the clockwise direction.

Symbol: C36

The rotation range is changed and the rotating direction is reversed.

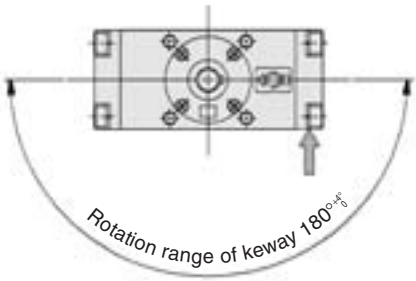

Note) If it is pressurized from the port indicated with the arrow, the shaft rotates in the clockwise direction.

Made to Order Specifications:

-XC37 to -XC46: Change of Rotation Range and Angle Adjusting Direction

Please consult with SMC for further information on specifications, dimensions and delivery.

5 Change of Rotation Range and Angle adjusting direction -XC37 to XC42

CRA1 → Refer to "How to Order" on page 231. **—XC37**

- **Change of rotation range and angle adjusting direction (-XC37 to XC42)**

Specifications

Applicable size	**50, 63, 80, 100**
Applicable shaft type	Shaft S, W, Y

The patterns with the rotation angle of 90° and 180° are applicable to the respective patterns with the rotation angles of 100° and 190° of the made-to-order specifications.

Symbol: C37

The rotation range and the angle adjusting direction of the angle adjustable type are changed.

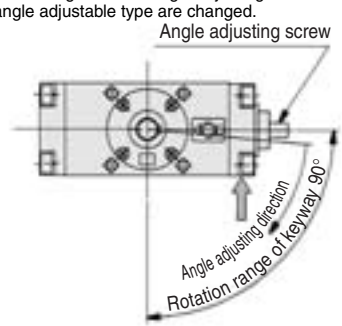

The rotation range under the adjustment of an angle at 60° is indicated below.

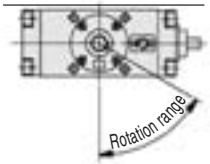

Note) If it is pressurized by the port indicated with the arrow, the shaft rotates in the clockwise direction.

Symbol: C38

The rotation range and the angle adjusting direction of the angle adjustable type are changed.

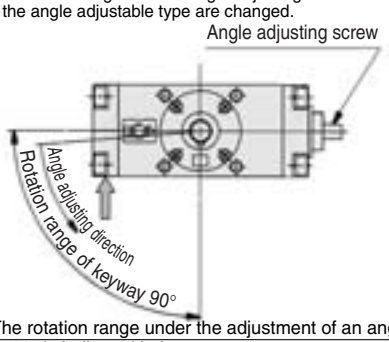

The rotation range under the adjustment of an angle at 60° is indicated below.

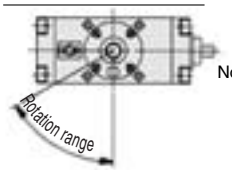

Note) If it is pressurized by the port indicated with the arrow, the shaft rotates in the clockwise direction.

Symbol: C39

The rotation range and the angle adjusting direction of the angle adjustable type are changed.

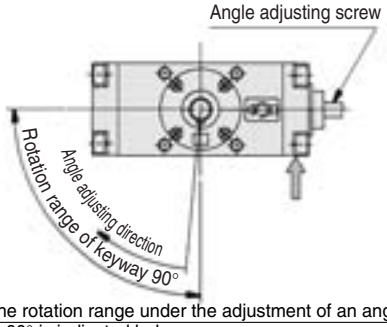

The rotation range under the adjustment of an angle at 60° is indicated below.

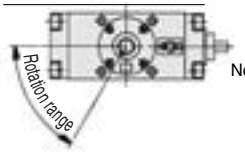

Note) If it is pressurized by the port indicated with the arrow, the shaft rotates in the clockwise direction.

Symbol: C40

The rotation range and the angle adjusting direction of the angle adjustable type are changed.

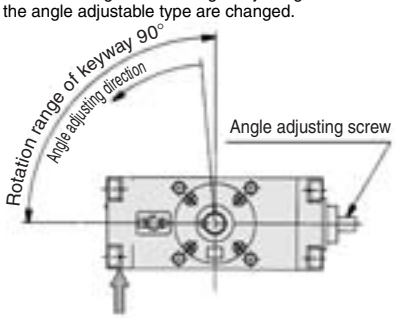

The rotation range under the adjustment of an angle at 60° is indicated below.

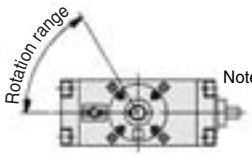

Note) If it is pressurized by the port indicated with the arrow, the shaft rotates in the clockwise direction.

Symbol: C41

The rotation range and the angle adjusting direction of the angle adjustable type are changed.

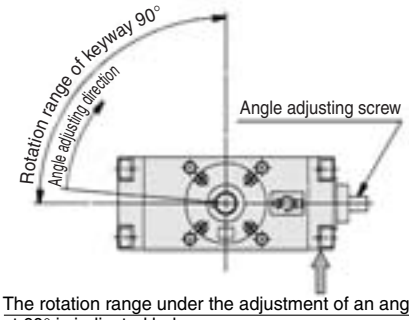

The rotation range under the adjustment of an angle at 60° is indicated below.

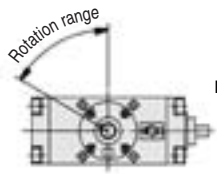

Note) If it is pressurized by the port indicated with the arrow, the shaft rotates in the clockwise direction.

Symbol: C42

The rotation range and the angle adjusting direction of the angle adjustable type are changed.

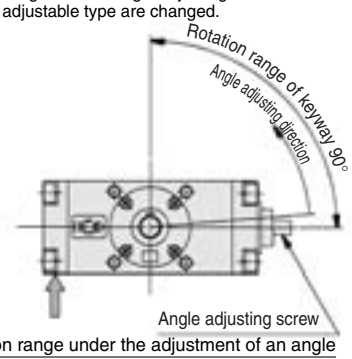

The rotation range under the adjustment of an angle at 60° is indicated below.

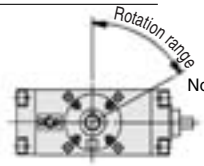

Note) If it is pressurized by the port indicated with the arrow, the shaft rotates in the clockwise direction.

Made to Order Specifications:

-XC37 to -XC46: Change of Rotation Range and Angle Adjusting Direction

Please consult with SMC for further information on specifications, dimensions and delivery.

-XC43 to XC46

CRA1 → Refer to "How to Order" on page 231. **—XC43**

- **Change of rotation range and angle adjusting direction (-XC43 to XC46)**

Specifications

Applicable size	**50, 63, 80, 100**
Applicable shaft type	Shaft S, W, Y

The patterns with the rotation angle of 90° and 180° are applicable to the respective patterns with the rotation angles of 100° and 190° of the Made to order specifications.

Symbol: C43

The rotation range and the angle adjusting direction of the angle adjustable type are changed.

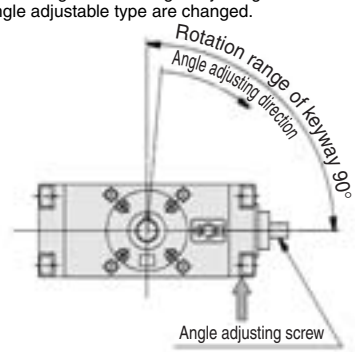

The rotation range under the adjustment of an angle at 60° is indicated below.

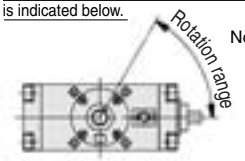

Note) If it is pressurized by the port indicated with the arrow, the shaft rotates in the clockwise direction.

Symbol: C44

The rotation range and the angle adjusting direction of the angle adjustable type are changed.

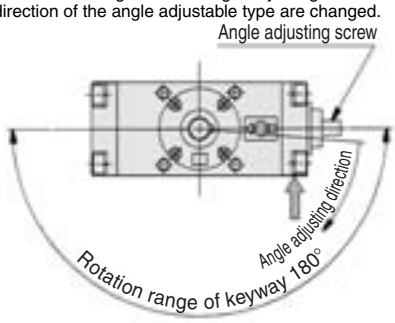

The rotation range under the adjustment of an angle at 120° is indicated below.

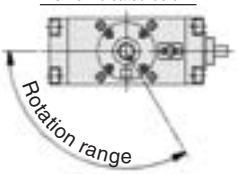

Note) If it is pressurized by the port indicated with the arrow, the shaft rotates in the clockwise direction.

Symbol: C45

The rotation range and the angle adjusting direction of the angle adjustable type are changed.

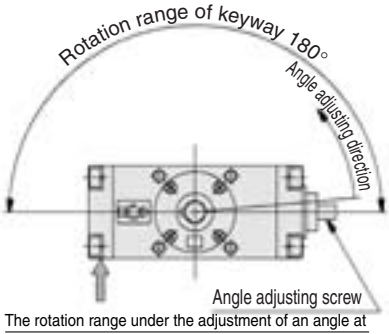

The rotation range under the adjustment of an angle at 120° is indicated below.

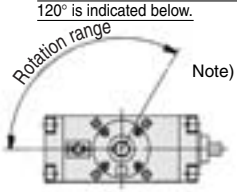

Note) If it is pressurized by the port indicated with the arrow, the shaft rotates in the clockwise direction.

Symbol: C46

The rotation range and the angle adjusting direction of the angle adjustable type are changed.

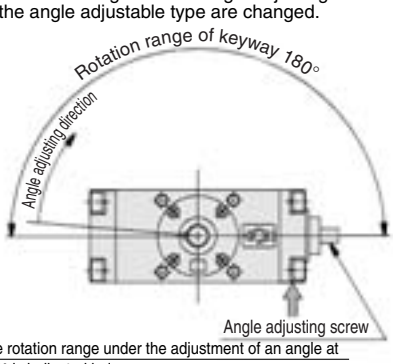

The rotation range under the adjustment of an angle at 120° is indicated below.

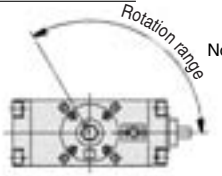

Note) If it is pressurized by the port indicated with the arrow, the shaft rotates in the clockwise direction.

Made to Order Specifications:

-XC47 to XC58: Change of Rotation Range and Angle Adjusting Direction (Angle adjusting screw moved to the left)

Please consult with SMC for further information on specifications, dimensions and delivery.

6 Change of Rotation Range and Angle Adjusting Direction (Angle adjusting screw moved to the left) -XC47 to XC52

CRA1 → Refer to "How to Order" on page 231. **—XC47**

- **Change of rotation range and angle adjusting direction (Angle adjusting screw moved to the left) (-XC47 to XC52)**

Specifications

Applicable size	**50, 63, 80, 100**
Applicable shaft type	Shaft S, W, Y

The patterns with the rotation angle of 90° and 180° are applicable to the respective patterns with the rotation angles of 100° and 190° of the made-to-order specifications.

Symbol: C47

For the angle adjusting type, angle adjusting screws are mounted to the left cover.

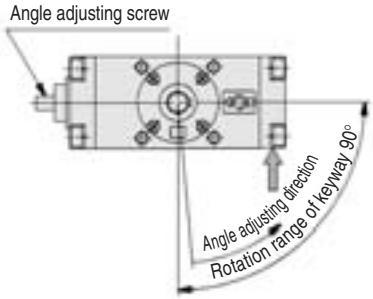

The rotation range under the adjustment of an angle at 60° is indicated below.

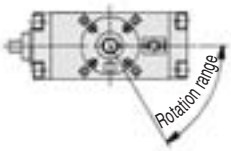

Note) If it is pressurized by the port indicated with the arrow, the shaft rotates in the clockwise direction.

Symbol: C48

For the angle adjusting type, angle adjusting screws are mounted to the left cover.

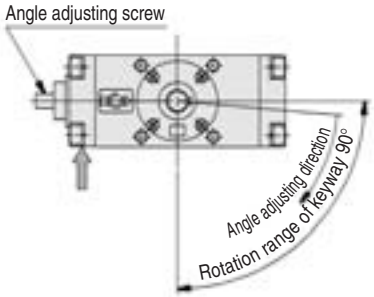

The rotation range under the adjustment of an angle at 60° is indicated below.

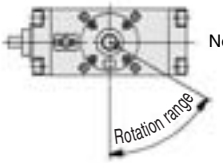

Note) If it is pressurized by the port indicated with the arrow, the shaft rotates in the clockwise direction.

Symbol: C49

For the angle adjusting type, angle adjusting screws are mounted to the left cover.

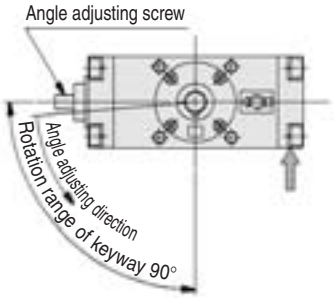

The rotation range under the adjustment of an angle at 60° is indicated below.

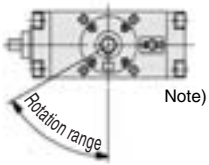

Note) If it is pressurized by the port indicated with the arrow, the shaft rotates in the clockwise direction.

Symbol: C50

For the angle adjusting type, angle adjusting screws are mounted to the left cover.

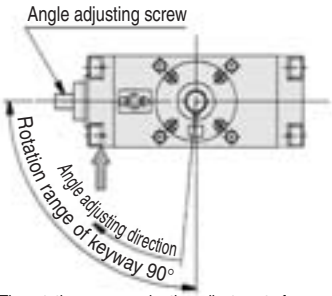

The rotation range under the adjustment of an angle at 60° is indicated below.

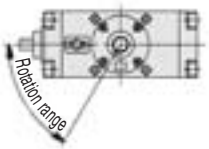

Note) If it is pressurized by the port indicated with the arrow, the shaft rotates in the clockwise direction.

Symbol: C51

For the angle adjusting type, angle adjusting screws are mounted to the left cover.

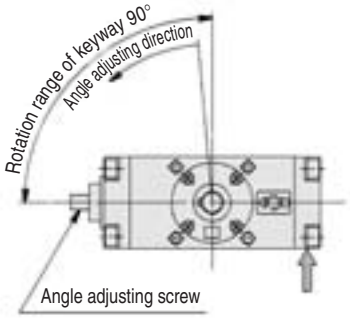

The rotation range under the adjustment of an angle at 60° is indicated below.

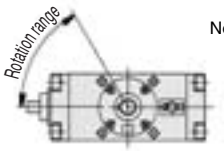

Note) If it is pressurized by the port indicated with the arrow, the shaft rotates in the clockwise direction.

Symbol: C52

For the angle adjusting type, angle adjusting screws are mounted to the left cover.

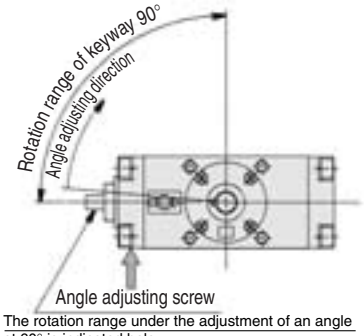

The rotation range under the adjustment of an angle at 60° is indicated below.

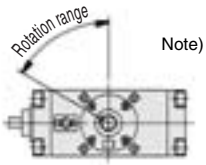

Note) If it is pressurized by the port indicated with the arrow, the shaft rotates in the clockwise direction.

Made to Order Specifications:

-XC47 to XC58: Change of Rotation Range and Angle Adjusting Direction (Angle adjusting screw moved to the left)

Please consult with SMC for further information on specifications, dimensions and delivery.

-XC53 to XC58

CRA1 → Refer to "How to Order" on page 231. **—XC53**

- **Change of rotation range and angle adjusting direction (Angle adjusting screw moved to the left) (-XC53 to XC58)**

Specifications

Applicable size	**50, 63, 80, 100**
Applicable shaft type	Shaft S, W, Y

The patterns with the rotation angle of 90° and 180° are applicable to the respective patterns with the rotation angles of 100° and 190° of the made-to-order specifications.

Symbol: C53

For the angle adjusting type, angle adjusting screws are mounted to the left cover.

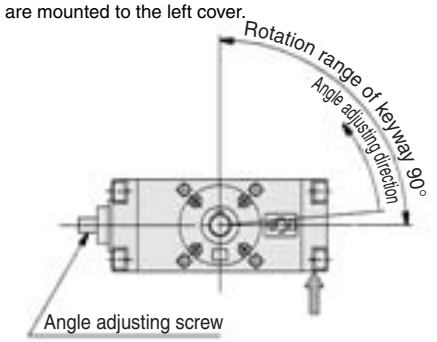

The rotation range under the adjustment of an angle at 60° is indicated below.

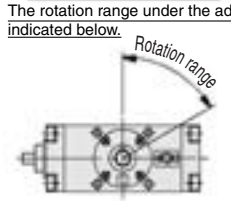

Note) If it is pressurized by the port indicated with the arrow, the shaft rotates in the clock-wise direction.

Symbol: C54

For the angle adjusting type, angle adjusting screws are mounted to the left cover.

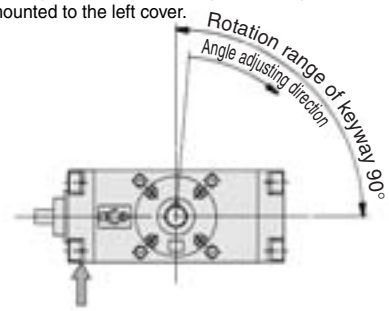

The rotation range under the adjustment of an angle at 60° is indicated below.

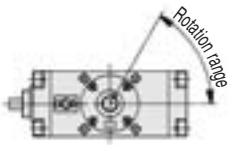

Note) If it is pressurized by the port indicated with the arrow, the shaft rotates in the clockwise direc-

Symbol: C55

For the angle adjusting type, angle adjusting screws are mounted to the left cover.

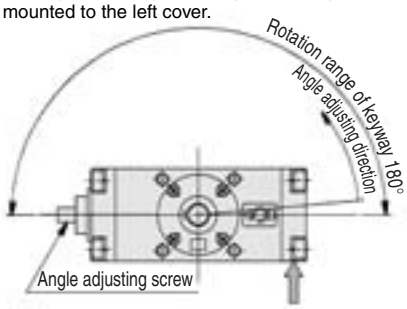

The rotation range under the adjustment of an angle at 120° is indicated below.

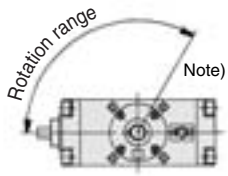

Note) If it is pressurized by the port indicated with the arrow, the shaft rotates in the clockwise direction.

Symbol: C56

For the angle adjusting type, angle adjusting screws are mounted to the left cover.

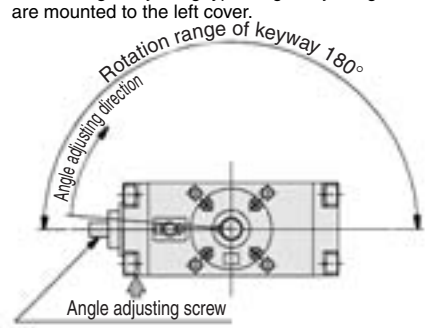

The rotation range under the adjustment of an angle at 120° is indicated below.

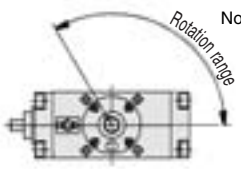

Note) If it is pressurized by the port indicated with the arrow, the shaft rotates in the clock-wise direction.

Symbol: C57

For the angle adjusting type, angle adjusting screws are mounted to the left cover.

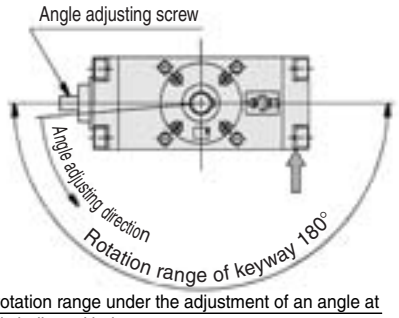

The rotation range under the adjustment of an angle at 120° is indicated below.

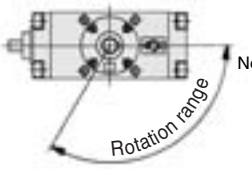

Note) If it is pressurized by the port indicated with the arrow, the shaft rotates in the clock-wise direction.

Symbol: C58

For the angle adjusting type, angle adjusting screws are mounted to the left cover.

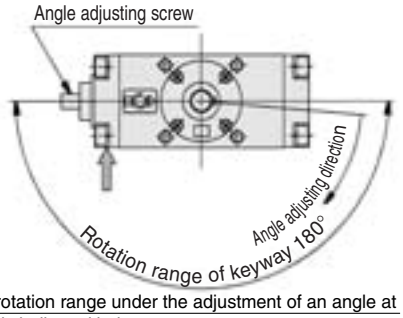

The rotation range under the adjustment of an angle at 120° is indicated below.

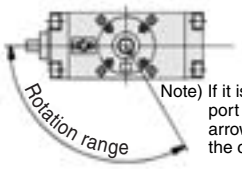

Note) If it is pressurized by the port indicated with the arrow, the shaft rotates in the clockwise direction.

Made to Order Specifications:

-XC59 to -XC61: Change of Port Location (Size 30 to 100)
-XC62: Reverse Auto Switch Mounting (Size 50 to 100)

Please consult with SMC for further information on specifications, dimensions and delivery.

7 Change of Port Location (Mounting location of the cover is changed.) -XC59 to XC61

CRA1 → **Refer to "How to Order" on page 231.** — **XC59**

• **Port position is changed. (-XC59 to XC61)**

Specifications

∗ Except for the solenoid valve equipped style.

Applicable size	**30, 50, 63, 80, 100**
Applicable shaft type	Shaft S, W, X, Y Z, T, J, K

The patterns with the rotation angle of 90° and 180° are applicable to the respective patterns with the rotation angles of 100° and 190° of the made-to-order specifications. For the bumper equipped type, the needle position is on the opposite side of the port.

Symbol: C59

Direction of the port is changed. (Upwards)

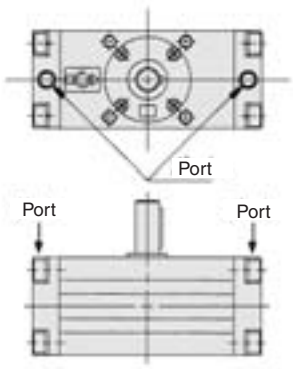

Symbol: C60

Direction of the port is changed. (Downwards)

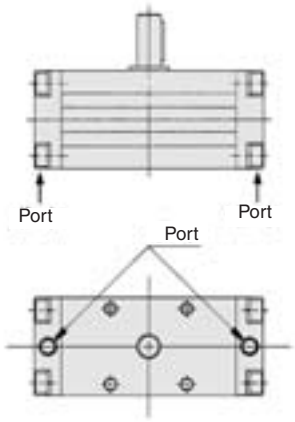

Symbol: C61

Direction of the port is changed. (Backwards)

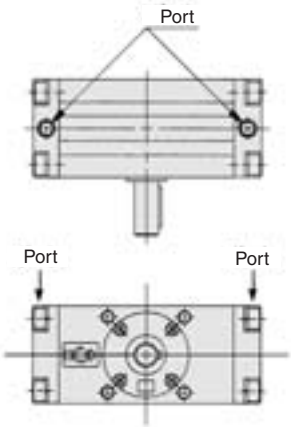

8 Reverse Mounting of the Auto Switch Against the Standard -XC62

CRA1 → **Refer to"How to Order" auto switch equipped type on page 193.** — **XC62**

Symbol: C62

The auto switch is reverse mounted to the standard.

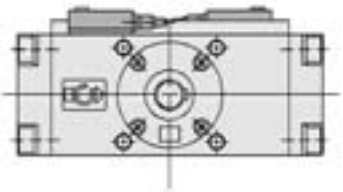

Made to Order Specifications:

-XC63, -XC64: One Side Air-hydro, One Side Air Type

Please consult with SMC for further information on specifications, dimensions and delivery.

9 One Side Air-hydro, One Side Air Type -XC63, -XC64

CRA1 **→ Refer to"How to Order" on page 231.** **—XC63**

- **One side air-hydro, One side air**
  -XC63: Left side air
  Right side air-hydro
  -XC64: Left side air-hydro
  Right side air

Specifications

Applicable size	**50, 63, 80, 100**
Applicable shaft type	Shaft S, W, X, Y Z, T, J, K

∗ Except for the solenoid valve equipped type, angle adjustable type and air cushion equipped type.

The patterns with the rotation angle of 90° and 180° are applicable to the respective patterns with the rotation angles of 100° and 190° of the made-to-order specifications.

Symbol: **C63**

One side air, one side air-hydro specifications (Left side air, Right side hydro)

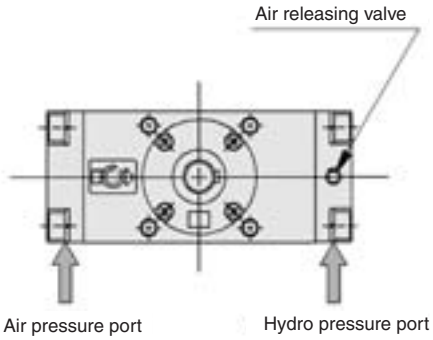

The figure shows the pressurized situation to the hydro pressure port.

Symbol: **C64**

One side air, one side air-hydro specifications (Left side hydro, Right side air)

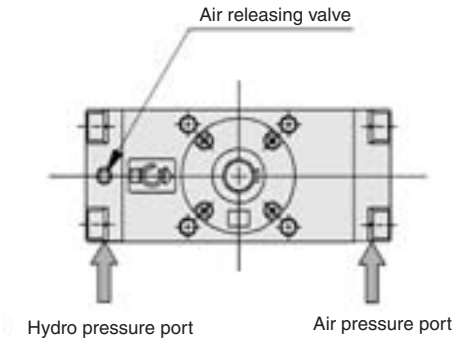

The figure shows the pressurized situation to the air pressure port.

Series CRA1
Made to Order Specifications:
-X6: Shaft, Bolt, Parallel Key Stainless Spec.
-X7: Heat Resistant Type

Please consult with SMC for further information on specifications, dimensions and delivery.

1 Shaft, Bolt, Parallel key Made of Stainless Steel Spec. -X6

C□RA1 → Refer to "How to Order" on pages 192, 193 and 208. S — X6

Stainless steel for main part

For applications in areas that pose a risk of rust or corrosion, a portion of the materials used in the standard parts has been changed to stain-less steel.

Specifications

Type	Pneumatic
Size	**30, 50, 63, 80, 100**
Fluid	Air (Non-lube)
Max. operating pressure	1.0 MPa
Min. operating pressure	0.1 MPa
Stainless steel part	Shaft, Bolt, Parallel key
Cushion	30 — Without cushion 50 to 100 — With or without air cushion
Auto switch	Mountable

∗ Refer to page 194 for other specifications.
∗∗ Except for the angle adjustable type.

2 Heat Resistant Type -X7

CRA1 → Refer to "How to Order" on pages 192 and 214. — X7

Heat resistant type

In this rotary actuator, the material of the seals has been changed to the heat resistant type (to withstand up to 100°C), for applications in environments that exceed the standard specification temperatures of 0 to 60°C.

Specifications

Type	Pneumatic
Size	**30, 50, 63, 80, 100**
Rotation	90°, 180° (Size 30 to 100) 100°, 190° (Size 50 to 100)
Ambient and fluid temperature	0 to 100°C
Lubrication	ISO VG32
Seal material	FKM
Shaft type	Single shaft, Double shaft, Single shaft with four chamfers, Double shaft key, Double shaft with four chamfers, Double round shaft, Double shaft (Round shaft, with four chamfers), Double round shaft
Cushion	30 — Without cushion 50 to 100 — With or without air cushion
Auto switch	Not mountable

∗ Refer to page 194 for other specifications.
∗∗ Except for models with solenoid valve.

3 Fluororubber Seal -X16

CDRA1 → Refer to "How to Order" on pages 193 and 214. — X16

Fluororubber seal

Seal is now changed to fluoro rubber.

Specifications

Type	Pneumatic
Size	**30, 50, 63, 80, 100**
Fluid	Air (Non-lube)
Max. operating pressure	1.0 MPa
Min. operating pressure	0.1 MPa
Ambient and fluid temperature	0°C to 60°C (No freezing)
Seal material	FKM
Cushion	30 — Without cushion 50 to 100 — With or without air cushion
Auto switch	Mountable

∗ Refer to page 194 for other specifications.
∗∗ Except for models with solenoid valve.

Made to Order Specifications:

-X10: Both Sides Angle Adjustable Type
-X11: One Side Angle Adjustable, One Side Cushion Type

Please consult with SMC for further information on specifications, dimensions and delivery.

4 Both Sides Angle Adjustable Type -X10

Refer to "How to Order" on page 214.

C□RA1 | Mounting | Shaft type | U | Size | Rotation | U-X10

Both sides angle adjustable type

Specifications

Type	Pneumatic
Size	**50, 63, 80, 100**
Rotation	90°, 180°, 100°, 190°
Shaft type	Single shaft (S), Double shaft (W), Single shaft with four chamfers (X), Double shaft key (Y), Double shaft with four chamfers (Z), Single round shaft (T), Double shaft/Round shaft, with four chamfers (J), Double round shaft (K)
Cushion	None
Variation	With auto switch, With solenoid valve

∗ Refer to page 194 for other specifications.

Adjusting direction: Adjusting direction "A": When angle adjusting screw on "A" side is screwed into the right direction.
Adjusting direction "B": When angle adjusting screw on "B" side is screwed into the right direction.

Rotation at 90°

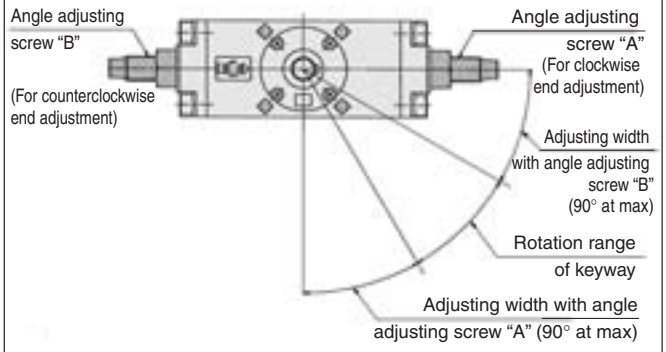

Rotation at 180°

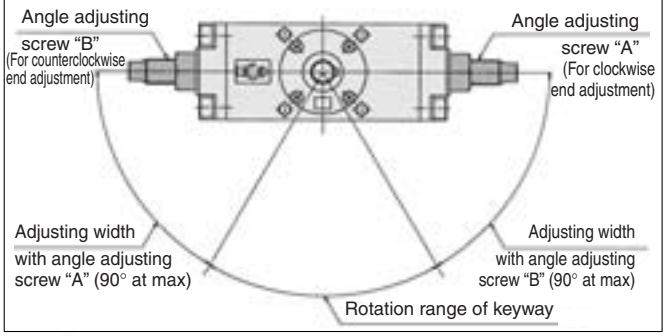

5 One Side Angle Adjustable, One Side Cushion -X11

Refer to "How to Order" on page 214.

C□RA1 | Mounting | Shaft type | U | Size | Rotation | C-X11

One side angle adjustable, one side cushion

Specifications

Type	Pneumatic
Size	**50, 63, 80, 100**
Rotation	90°, 180°, 100°, 190°
Shaft type	Single shaft (S), Double shaft (W), Single shaft with four chamfers (X), Double shaft key (Y), Double shaft with four chamfers (Z), Single round shaft (T), Double shaft/Round shaft, with four chamfers (J), Double round shaft (K)
Cushion	With cushion on one side
Auto switch	Mountable
Variation	With auto switch, With solenoid valve

∗ Refer to page 194 for other specifications.

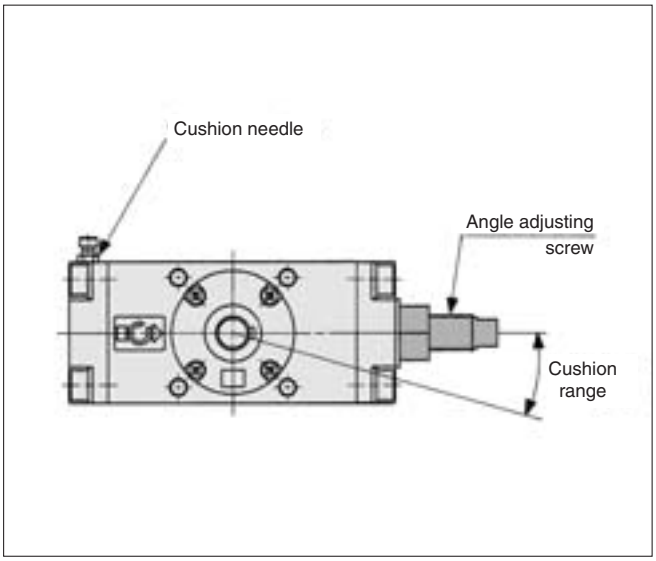

∗ Refer to pages 204 and 206 for dimensions.

Made to Order Specifications: -X6 to -X16

How to Order

C [D] RA1 B S [ ] [P] 50 — 90 [S] – [F59] – [X6] – [X16]

- **Built-in magnet**
- **Type**

Nil	Standard
U	Angle adjustable type

- **Pattern**
- **Suffix symbol**

Nil	-X7, -X16
S	-X6
U	-X10
C	-X11

∗ Refer to pages 240 and 241 for details.

- **Auto switch**
- **Made-to-order symbol**
  - Combination is available only when all the conditions are fulfilled in above combination chart 9.

∗ Combination of made-to-order for -X is available up to 2 kinds.
∗ Above is the typical example of combination.

Combination Chart of Made to Order

Chart 9. Combination between -X□ and -X□ (S, W, X, Y, Z, T, J, K shaft)

Part no.	Description	Shaft type								Applicable size	Combination		
		S	W	X	Y	Z	T	J	K				
X 6	Shaft, Bolt, Parallel key stainless steel spec.	●	●	●	●	●	●	●	●	30 to 100	X6		
X 7 ∗	Heat resistance (100°C)	●	●	●	●	●	●	●	●		●	X7	
X10	Angle adjustment for both sides	●	●	●	●	●	●	●	●	50 to 100	–	●	
X11	Angle adjustment for single side, Air cushion with single side	●	●	●	●	●	●	●	●		–	●	X10 to X11
X16	Fluororubber seal	●	●	●	●	●	●	●	●	30 to 100	●	–	●

*X7: Not available for the built-in magnet type.